adornus™

Alusso Series
Specification Guide 2026





Table Of Content

- About Alusso Series..... 3
- Limited Lifetime Warranty..... 4-6
- Policies & Procedures..... 7-8
- SOHO Door Style Options 9-10
- Kitchen with Doorstyle..... 11-20
- Technical Specifications..... 21-24
- Alusso Series 25-26
- Build Information..... 27
- Door Sizing..... 28
- Full Access Cabinet Specifications..... 29-38

Wall Cabinets

- Wall Cabinets Introduction..... 39-40
- Wall Cabinets SKU Listing..... 41-50

Base Cabinets

- Base Cabinets Introduction..... 51-52
- Base Cabinets SKU Listing..... 53-62

Vanity Cabinets

- Vanity Cabinets Introduction..... 63-64
- Vanity Cabinets SKU Listing..... 65-66

Capri Gola Cabinets

- Capri Gola Base Cabinet SKU Listing..... 67-75
- Capri Gola Vanity Cabinets SKU Listing..... 76-78

Accessories

- Accessory Introduction..... 79-80
- Accessories SKU Listing..... 81-94

Alusso Series

Quick & On Time

We believe that quality is what sets us apart from our competitors. We have been in the business of providing the best kitchen cabinets for years now.

Limited Lifetime Warranty

Adornus , LLC (“Adornus”) extends the following lifetime limited warranty (“Limited Warranty”) to the first residential purchaser (“Residential Purchaser”) of any cabinet sold by Adornus (each, a “Product”). This Limited Warranty is only applicable to Products sold to the first Residential Purchaser and used in the applications described below within the United States. Residential Purchaser may not assign or transfer this Limited Warranty. Under this Limited Warranty, a “Residential Purchaser” means any of the following:

- A person who purchases and installs the Product in a dwelling that is owned and used by that person as his/her primary or secondary home; or
- Any person or business such as a builder, contractor or developer that purchases and installs the Product in a newly constructed or remodeled dwelling that will be used by the initial owner/purchaser of that dwelling as a primary or secondary home. In such situation, this Limited Warranty may be assigned to the initial owner/purchaser who uses the dwelling as a primary or secondary home, but may not be transferred or assigned to subsequent owners of the dwelling.

Under this Limited Warranty, a primary or secondary home does not include rental property. This Limited Warranty does not apply to landlords, leasing companies, or other commercial purchasers. Subject to the exclusions and limitations set forth in this Limited Warranty, Adornus warrants to Residential Purchaser that each Product will be free from defects in material and workmanship, under normal use and maintenance, for the applicable warranty period stated below. This Limited Warranty gives Residential Purchaser specific legal rights, and Residential Purchaser may have other rights which vary from State to State. This Limited Warranty for Residential Purchasers begins on the date the Product was purchased, whether purchased by the Residential Purchaser or by a third party on Residential Purchaser’s behalf. This Limited Warranty is only valid if Residential Purchaser uses the dwelling as his/her primary or secondary home and does not extend to future owners if the property is sold.

THIS LIMITED WARRANTY IS ADORNUS’ SOLE AND EXCLUSIVE WARRANTY WITH RESPECT TO THE PRODUCTS. ALL IMPLIED WARRANTIES ARE STRICTLY LIMITED TO THE DURATION OF THE LIMITED WARRANTY APPLICABLE TO THE PRODUCT AS STATED HEREIN, INCLUDING BUT NOT LIMITED TO, ANY WARRANTY OF MERCHANTABILITY OR OF FITNESS FOR A PARTICULAR PURPOSE. IN NO EVENT SHALL ADORNUS BE LIABLE TO THE RESIDENTIAL PURCHASER OR ANY THIRD PARTY FOR INCIDENTAL OR CONSEQUENTIAL DAMAGES, INCLUDING, WITHOUT LIMITATION, DAMAGES ARISING FROM PERSONAL INJURY, LOST PROFITS, LOSS OF BUSINESS OPPORTUNITY, LOSS OF PROPERTY, ECONOMIC LOSSES, OR STATUTORY OR EXEMPLARY DAMAGES, WHETHER FROM NEGLIGENCE, WARRANTY, STRICT LIABILITY OR OTHERWISE.

Limited Lifetime Warranty

Exclusions

This Limited Warranty does not apply to any Product:

- Installed or used outdoors;
- Used for purposes for which it is not designed or intended by Adornus;
- That has been subjected to misuse, vandalism, abuse, negligence, accident, or unauthorized modifications;
- That has been improperly stored (if the Product must be stored, it should be covered and stored in a humidity and temperature-controlled environment, away from direct sunlight);
- That has been improperly installed, cleaned, or maintained (for more information regarding the proper use and care of the Product;
- That has been subjected to improper temperature, moisture and/or humidity extremes (temperature outside the range of 50-85°f (10-29°c) and humidity outside the range of 30-55% are considered extreme);
- Damaged by fire, flood, acts of God, or other external causes beyond adornus' control;
- Varying in color and characteristics due to age, sunlight, smoke, or other environmental conditions;
- Exhibiting any effects on the color and/or integrity of the finish or appearance due to the use of abrasive cleaners, cleaners that contain chlorine, acidic cleaners, scuffing sponges or steel wool; and/or
- Exhibiting normal wear and tear.

In addition, natural woods may vary in color and characteristics and exhibit subtle changes as they age. For example, painted doors, drawer fronts, and face frames may eventually have visible cracking around the joint area, and cabinet colors may darken or lighten over time. These variations are the material in relation to their environmental exposure and are not covered under this Limited Warranty.

Sole and Exclusive Remedy

In the event of a defect in the workmanship or materials of a Product occurring during the Limited Warranty period described above, Adornus will, at its sole option, repair or replace any defective Product or Product component; provided, if it is not commercially feasible to repair or replace a defective Product or Product component, Adornus may refund the original price paid by Residential Purchaser for the defective Product or Product component, or provide a credit towards a similar type of product sold by Adornus. The foregoing, at Adornus' option, are the Residential Purchaser's sole and exclusive remedies for any Product defect or non-conformity.

Limited Lifetime Warranty

In addition, by way of example but not limitation, the following costs and expenses are not covered by this Limited Warranty: (1) labor costs for the original installation, removal, or reinstallation of the Product, or any defective part thereof; (2) labor costs or material charges for the removal, reinstallation, repainting, refinishing or replacement of any other items or building materials which must be removed, replaced, reinstalled, or refinished in order to repair or replace the defective Product or component. For example, costs associated with the following will not be reimbursed: counters, sinks, tiles, flooring, accessories, appliances or plumbing fixtures. When a claim for warpage, joint separation or wood growth is submitted, Adornus may, at its sole option and after inspection, defer action for up to twelve (12) months to allow the Product to acclimate to the installed environment. Further, Adornus reserves the right to modify or alter any Product design, specifications or materials without obligation to make similar changes to Products previously sold by Adornus. The repair or replacement remedies offered by Adornus under this Limited Warranty are contingent on the current Product offerings of styles and construction options within Adornus' Product line at the time a warranty claim is made by Residential Purchaser. If a valid warranty claim is filed for an obsolete Product, Adornus reserves the right, at its sole option, to honor its repair or replacement obligations under this Limited Warranty by either: (1) replacing the affected Product or component with a new Product or component of the same or approximate style or color from Adornus' current Product line or offerings; or (2) replacing the affected Product or component to achieve a uniform appearance with a similar or comparable product style or approximate color of the originally purchased Product style. If a Product or components are replaced or repaired, Adornus cannot guarantee an exact match with the finish or appearance of other products or fixtures installed at Residential Purchaser's dwelling. This is due to changes that may occur during the Products' natural aging process, which may affect its color and/or grain.

Limitation of Liability

Except as otherwise required by applicable law, the remedies described above are the Residential Purchaser's sole and exclusive remedies and Adornus' entire liability for any breach of this Limited Warranty. Adornus' total liability shall under no circumstances exceed the actual amount paid by Residential Purchaser for the defective Product.

All potential claims hereunder must be submitted to Adornus, in writing, at the address below and must specify the defects present in the Products and/or Product components.

Dealer Responsibilities

Dealer acknowledges and agrees that it is solely responsible for communicating all policies, product information, order details, installation instructions, delivery expectations, and claim procedures to its customers.

The company shall not communicate directly with the Dealer's customers. The company shall not be liable for any inaccurate, incomplete, or misleading information provided by the Dealer or its representatives.

Order Placement

Orders may be submitted by dealer using the company's online portal, approved order forms, 2020 Design or ProKitchen SKU lists, or email through a designated customer service representative.

Orders submitted by telephone will not be accepted.

Dealer shall review and confirm all orders for accuracy, including but not limited to:

- Cabinet sizes and configurations
- Modifications and custom notes
- Finished ends and hinge directions
- Color, style, and material selections
- Quantities
- Shipping method

Once an order has been confirmed and approved by Dealer, Dealer assumes full responsibility for the accuracy and completeness of the order.

Changes, Cancellations, and Restocking Fees

Semi-custom, assembled, and modified orders shall not be changed, canceled, or returned after submission to production.

Stock (RTA) orders may be changed prior to release to the warehouse for fulfillment.

Orders that have been shipped or palletized shall incur a twenty-five percent (25%) restocking fee and the Dealer shall be responsible for return freight costs, if applicable.

Non-returnable items include:

- Semi-custom (made to order) cabinets
- Modified cabinets
- Assembled cabinets
- RTA cabinets assembled by the Dealer or end customer
- Special-order or custom-size cabinets

Delivery and Pick Up

Dealer may select from the following delivery options:

(a) Pick up at an Adornus warehouse;
(b) Company truck curbside delivery;
(c) White-glove delivery for an additional fee;
(d) Common carrier scheduled curbside delivery by company;
(e) Common carrier scheduled by dealer.

Rescheduled deliveries may incur a rescheduling fee.

Inspection and Claims

Dealer or its designated representative shall inspect all shipments immediately upon receipt.

Dealer shall verify and sign for both piece count and pallet count.

Claims for unconcealed damages or shortages must be noted on the Bill of Lading at the time of delivery and reported to Adornus immediately. Claims without proper documentation may be rejected.

Claims for concealed damage must be reported within 7 business days of delivery via email to customerservice@adornus.com, including photos, order number, item numbers, and detailed description.

Claims for concealed damages must be reported prior to installation via email to customerservice@adornus.com, including photos, order number, item numbers, and detailed description.

Product Warranty

Please refer to the Adornus official product warranty policy form.

Dealer Conduct and Compliance

Dealer agrees to:

- Provide accurate information to customers
- Represent Adornus products professionally
- Maintain all account terms in good standing
- Adhere to all policies and procedures outlined in this agreement

Non-compliance may result in suspension or termination of Dealer privileges.

SOHO Door Style Options

Textured Finishes



Walnut



Java



Sunset

Ice



Rift



Pebble



Marigold



Noir



Canella



Realm



Lofty



Fad

SOHO Door Style Options

Textured Finishes



Flaxen



Bruno



Impulse

Gloss Finishes

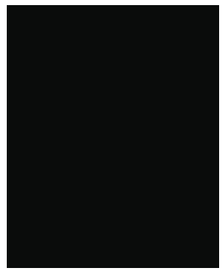

Black

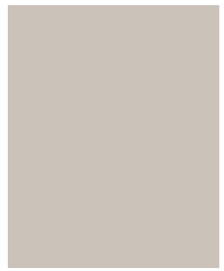

Cashmere

Sunny White



Tortora

Matte Finishes

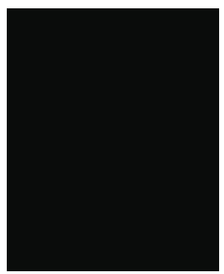

Black

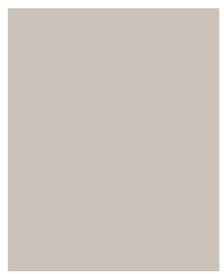

Cashmere

Sunny White



Tortora

Textured Finishes



Walnut



Black

Textured Finishes



Sunset



Canella

Textured Finishes



Realm

Gloss Finishes



Sunny White

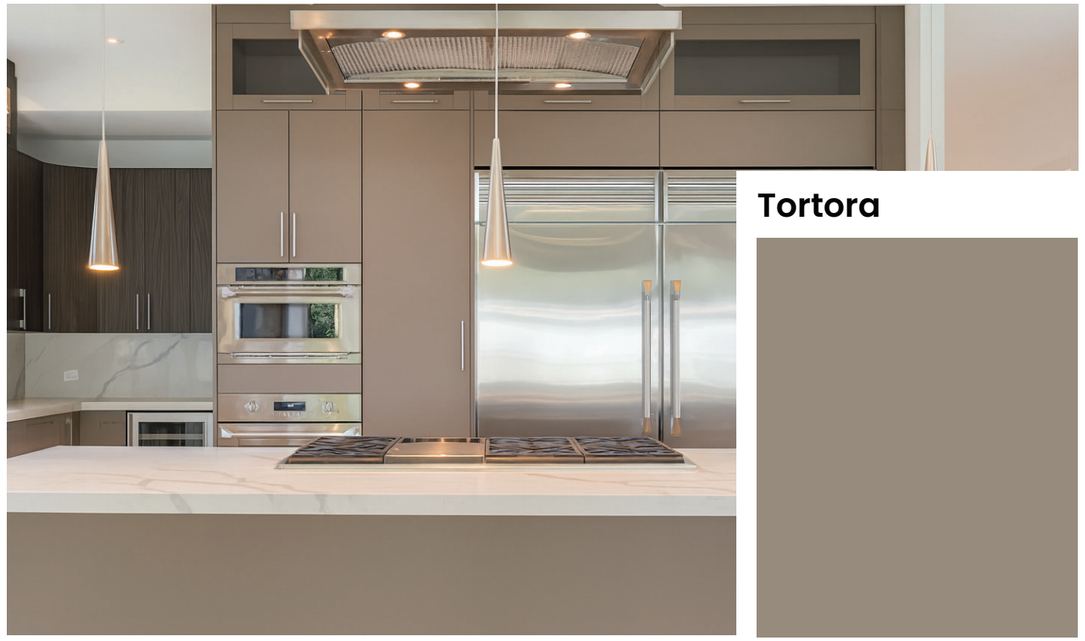

Tortora

TECHNICAL SPECIFICATIONS

Textured, High Gloss & Matte Finishes Dimensions

Horizontal Textured Pattern



Height		Width	
Minimum	Maximum	Minimum	Maximum
3″	80″	3″	109″

Vertical Textured Pattern



Height		Width	
Minimum	Maximum	Minimum	Maximum
3″	109″	3″	80″

Horizontal High Gloss & Matte Finishes



Height		Width	
Minimum	Maximum	Minimum	Maximum
3″	47″	3″	110″

Vertical High Gloss & Matte Finishes



Height		Width	
Minimum	Maximum	Minimum	Maximum
3″	110″	3″	47″

Vertical Grain Direction

Non Sequenced Method (Standard)

The production of doors is done randomly, that means, they will be fabricated without order and each one will display its own characteristics (graining, shadow, etc.). This method is the standard method of production in the industry.

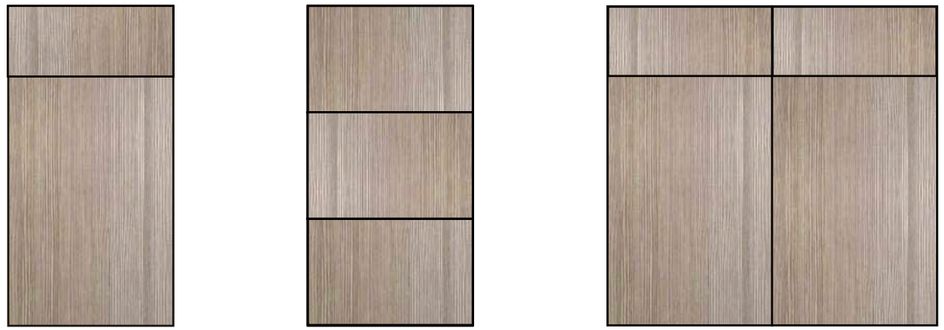

Sequenced Method (offered at additional cost)

Production of doors takes into account the position of doors and drawer fronts.

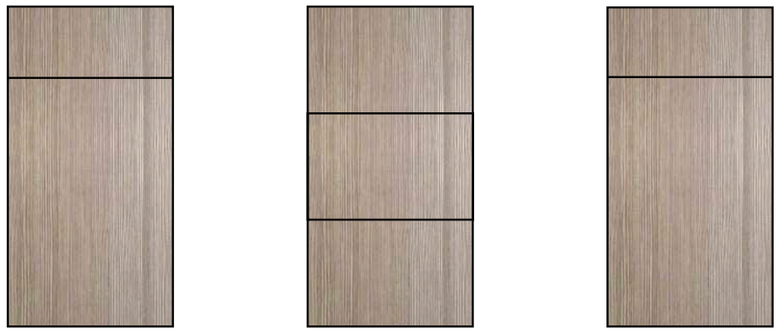

Horizontal Grain Direction

Non Sequenced Method (Standard)

The production of doors is done randomly, that means, they will be fabricated without order and each one will display its own characteristics (graining, shadow, etc.). This method is the standard method of production in the industry.



Sequenced Method (offered at additional cost)

Production of doors takes into account the position of doors and drawer fronts. Sequence limited to 9’ (panel size). Surcharge may apply for horizontal sequencing. Kitchen layouts required for production.



ALUSSO SERIES

Sleek, Stylish and Functional

The Alusso Series is the ideal solution for contemporary kitchen design. This sleek, full access cabinetry system features a refined modern aesthetic paired with an expansive color palette curated to reflect today's leading design trends. Engineered for both style and performance, the Alusso Series delivers high quality modern cabinetry that consistently exceeds expectations.







Build Information

Cabinet Construction

The Alusso Series focuses on delivering the essential features that fit most projects. Whether you're outfitting a kitchen, closet, laundry room, or office, this line provides stylish cabinets with minimal wait time.

For a truly seamless and streamlined design, the frameless box is the best choice. This design focuses on a clean, uninterrupted aesthetic with no visible borders, offering a sleek and spacious feel. The frameless structure maximizes interior access, making it ideal for modern settings and spaces.



Cabinet Box

- ¾" White linen melamine finish plywood box.

Construction

- ¾" White linen melamine finish plywood sides, shelves, tops and bottom. 3/8" White linen melamine finished Plywood backs.

Stretchers, Nailers, and Toe Kick

- ¾" White linen finish plywood.

Doors/Drawer Fronts

- Doors & fronts available from our Alusso European Line.

Drawer

- Slim, double wall, straight sided metal drawer system.

Shelves

- ¾" White linen melamine plywood box.

Hinges

- Soft close hinges with 6 way adjustment.

Legs

- Adjustable leg levelers for base and tall cabinets.

Door Sizing

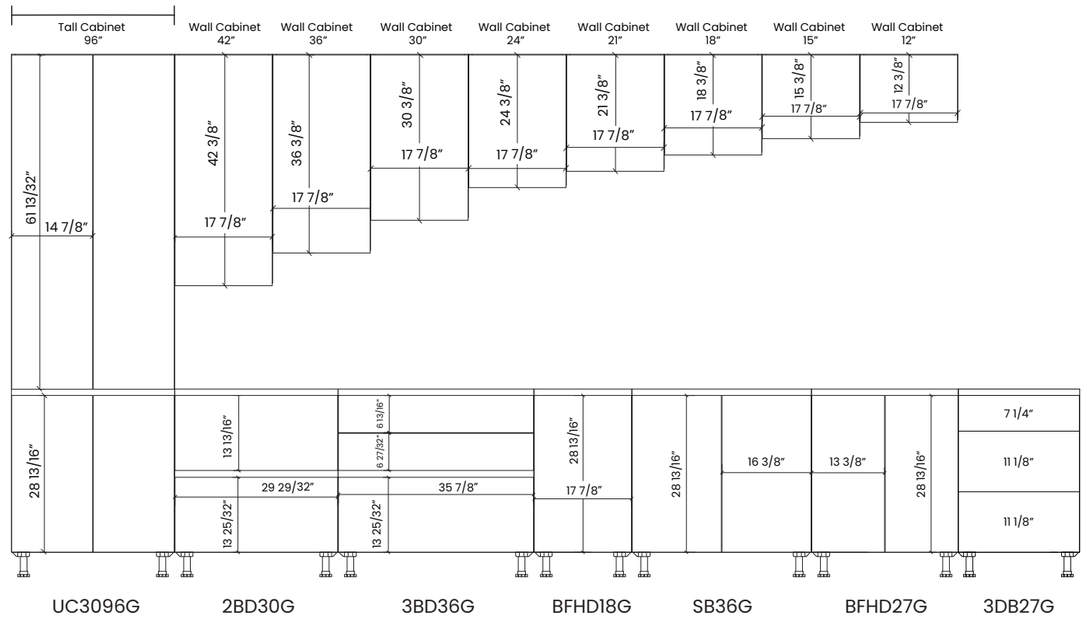

Reveals

Wall Cabinets

- 1/16" on left & right | 1/8" on top & bottom

Base and Vanity Cabinets

- 1/16" on left and right side
- 1/4" on top, no reveal on bottom
- 1/8" between doors and drawer fronts

Tall Cabinets

- 1/16" on left and right side
- 1/8" on top, no reveal on bottom
- 1/8" between top and bottom doors

Alignment

Utility Tall 84"

- Top door lines up with 30" Wall Cabinet

Utility Tall 90"

- Top door lines up with 36" Wall Cabinet

Utility Tall 96"

- Top door lines up with 42" Wall Cabinet

Full Access Cabinet Specifications

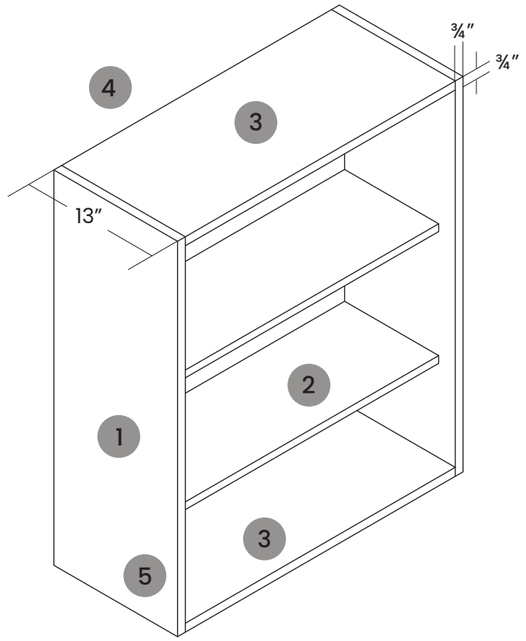

1. 3/4″ Sides
2. 3/4″ Adjustable Shelves
3. 3/4″ Top and Bottom
4. 3/8″ Plywood Back with 3/4″ Top and Bottom Nailers
5. Alusso cabinets require applied panels for exposed ends and (optional) bottoms

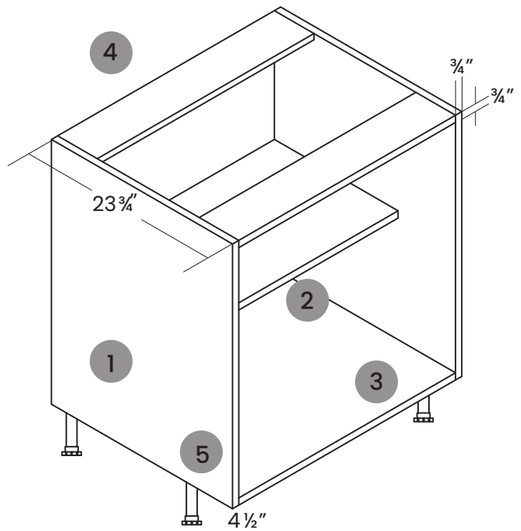

1. 3/4″ Sides
2. 3/4″ Adjustable Shelves
3. 3/4″ Bottom
4. 3/8″ Plywood Back with 3/4″ Top and Bottom Nailers
5. Alusso cabinets require applied panels for exposed ends and (optional) bottoms

Full Access Tall Cabinet Specifications

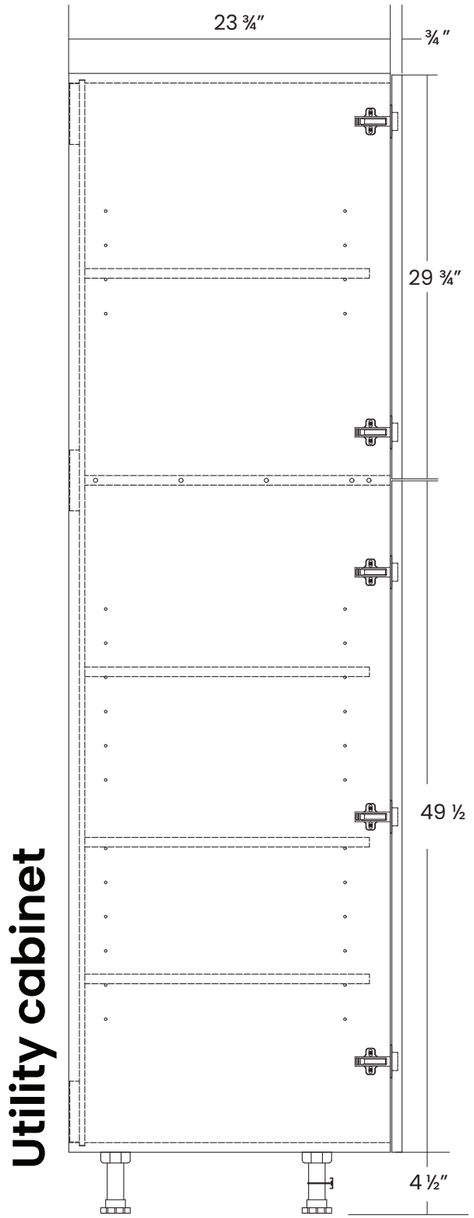

Utility cabinet

Utility Cabinet Number of Shelves:

Utility 84″
Four Shelves

Utility 90″
Five Shelves

Utility 96″
Five Shelves

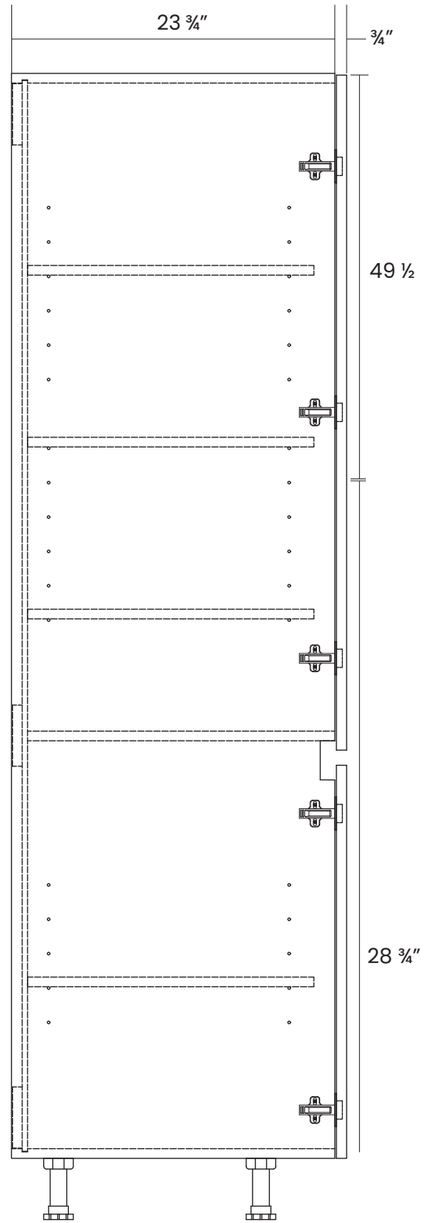

Gola utility cabinet

Full Access Wall and Base Cabinet Specifications

Wall cabinet

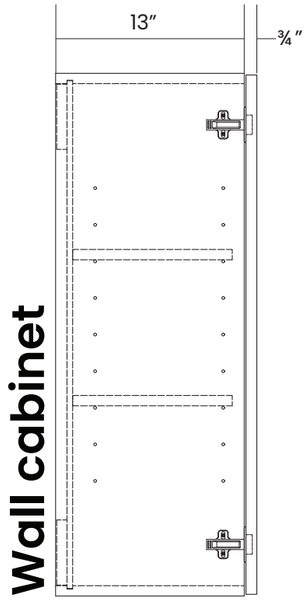

Base cabinet

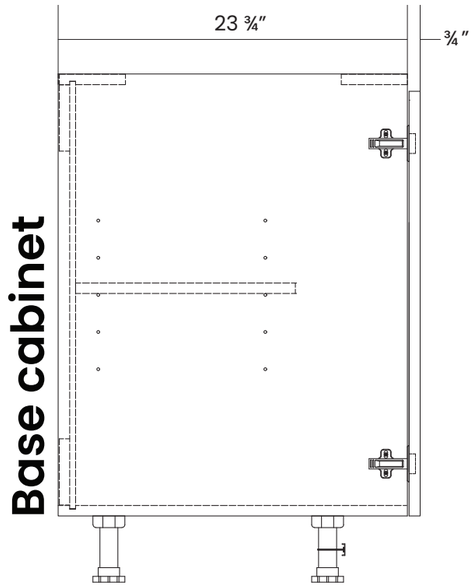

Gola base cabinet

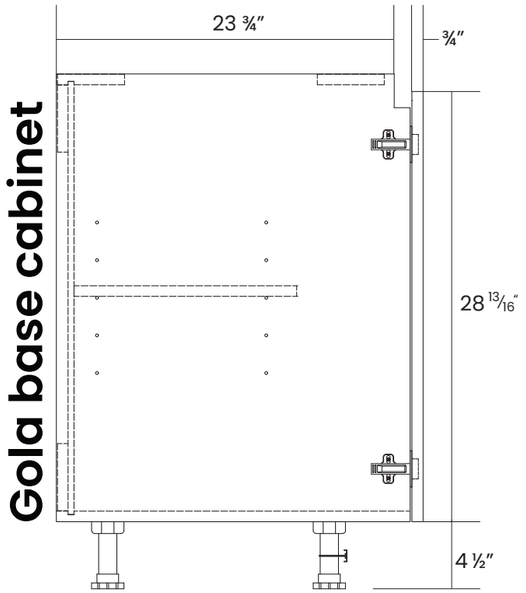

Full Access Oven Cabinet Specifications

Oven cabinet

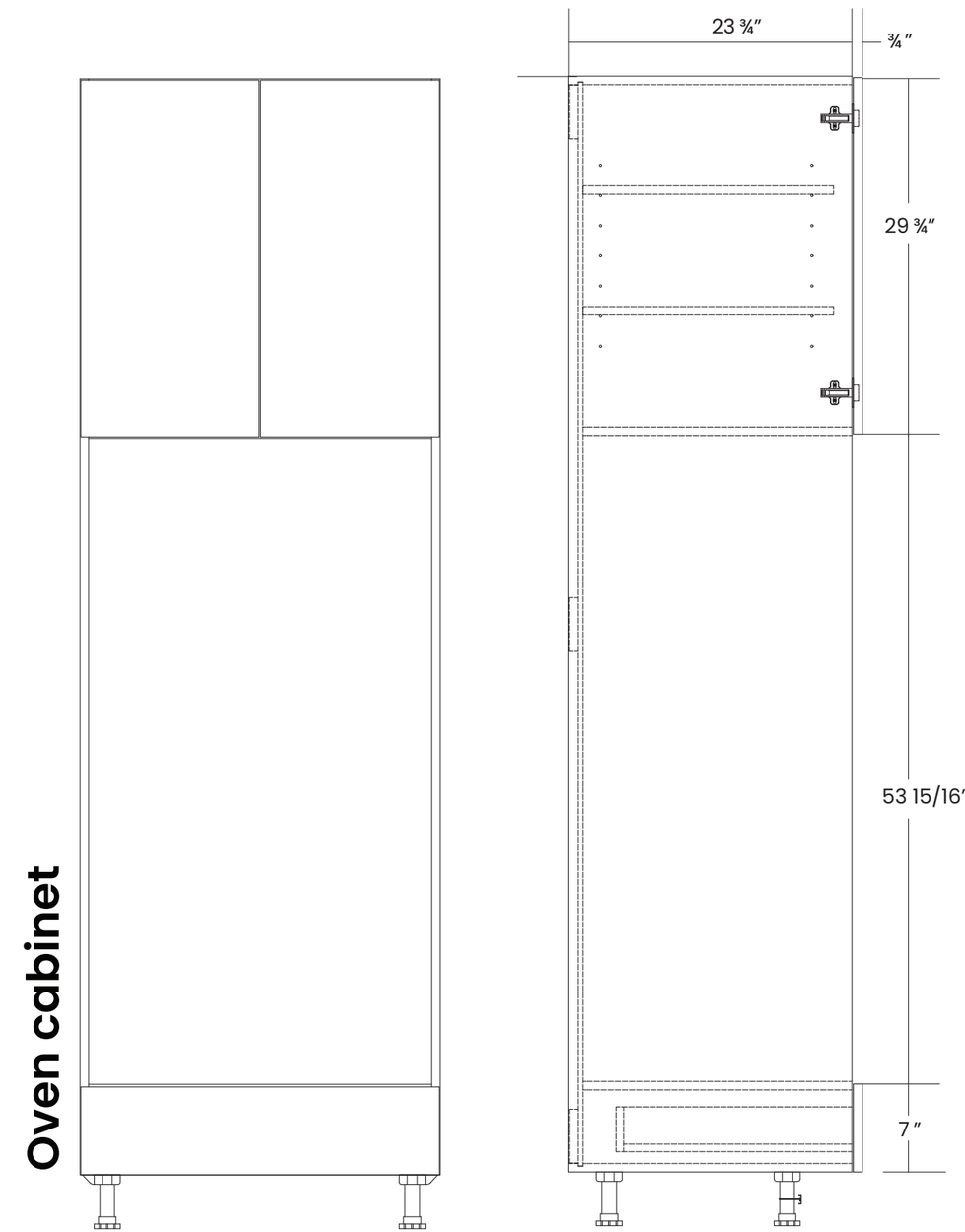

Full Access Gola Oven Cabinet Specifications

Gola oven cabinet

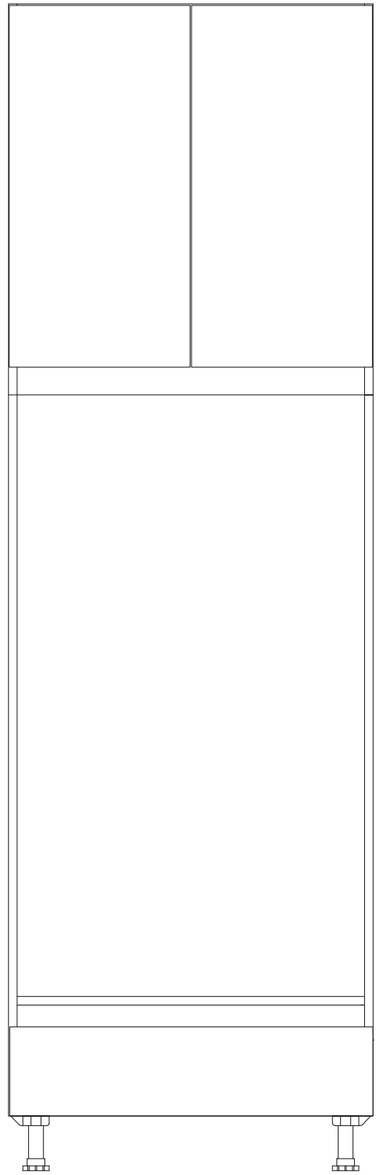

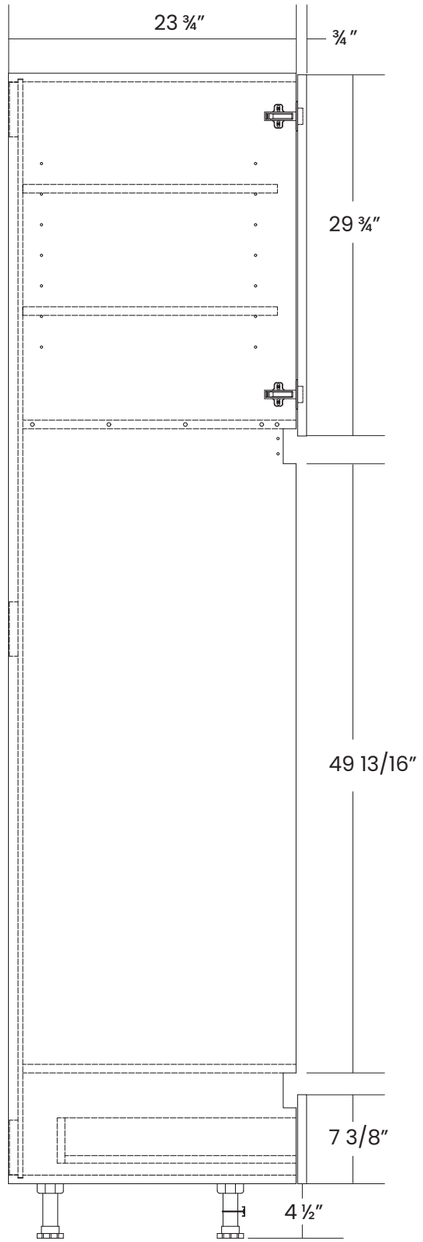

Full Access Oven Cabinet Specifications

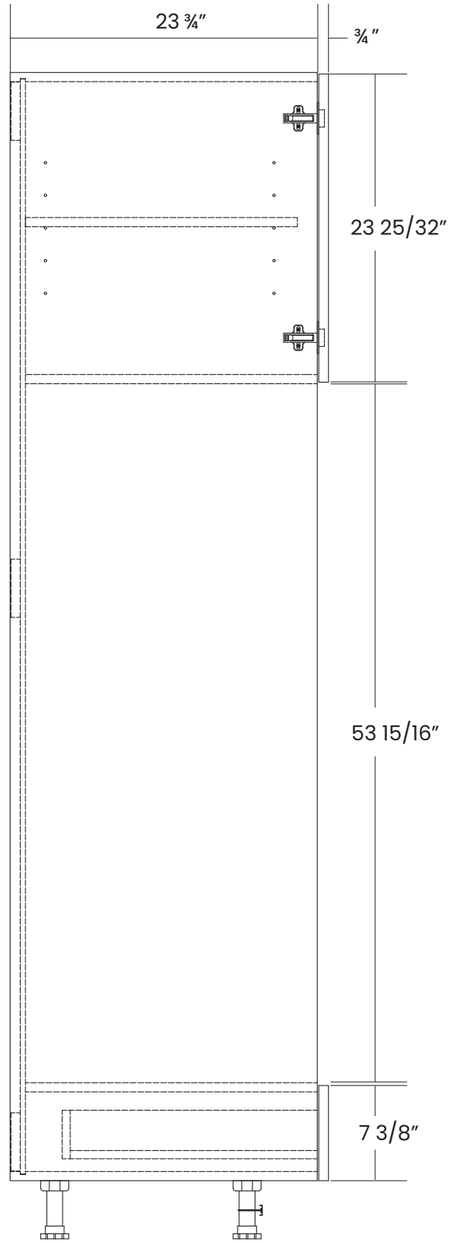

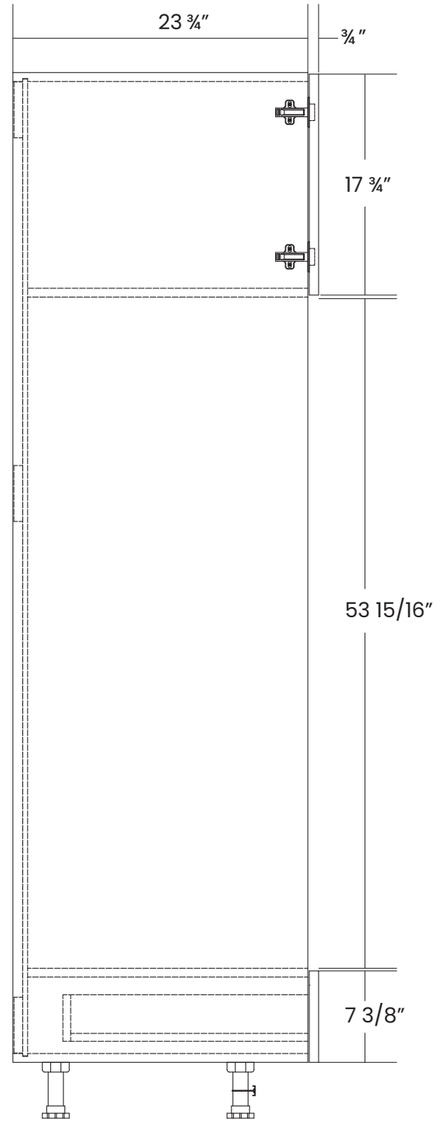

Full Access Gola Oven Cabinet Specifications

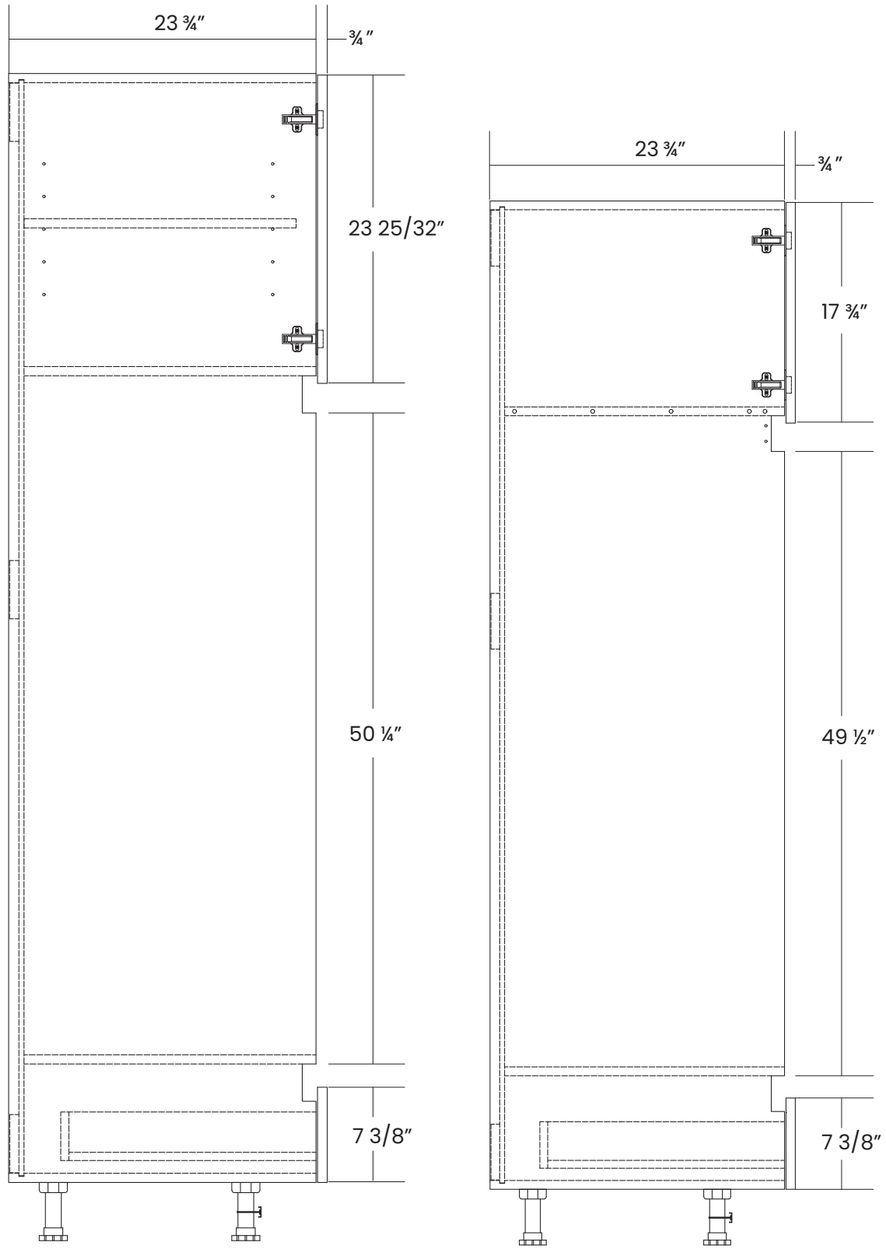

Full Access Blind Corner Cabinet Specifications

Wall blind corner

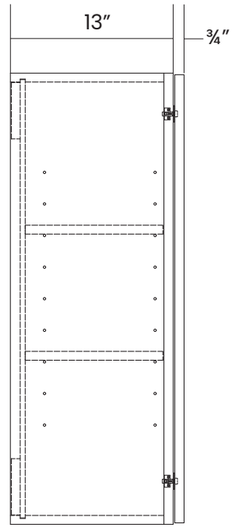

Base blind corner

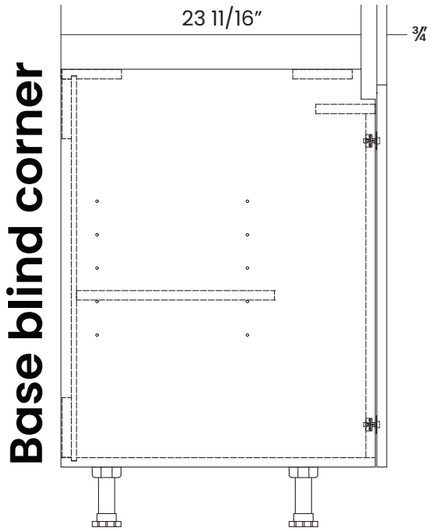

HINGE SIDE DETERMINES BLIND SIDE
(BLIND LEFT = HINGE LEFT)

Full Access Blind Corner Cabinet Specifications

Shown blind right

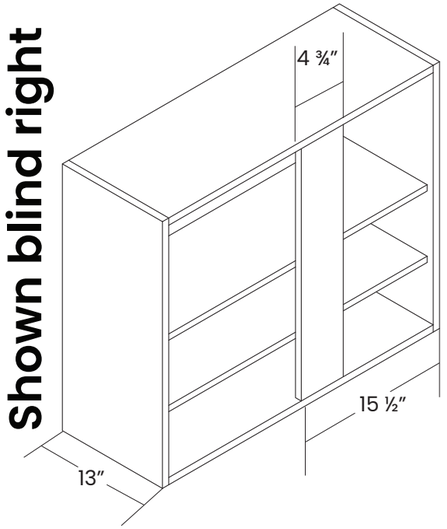

Shown blind left

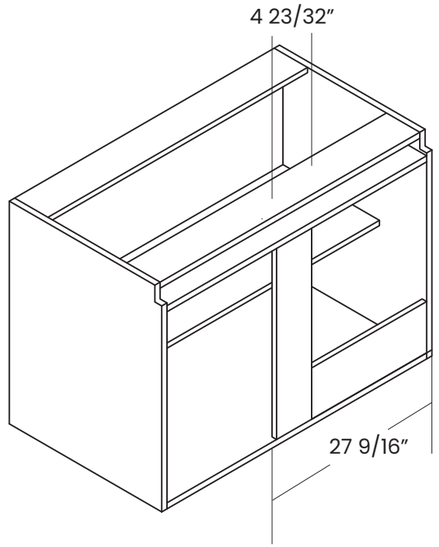

Full Access Angle Cabinet Specifications

Wall angle cabinet 24″

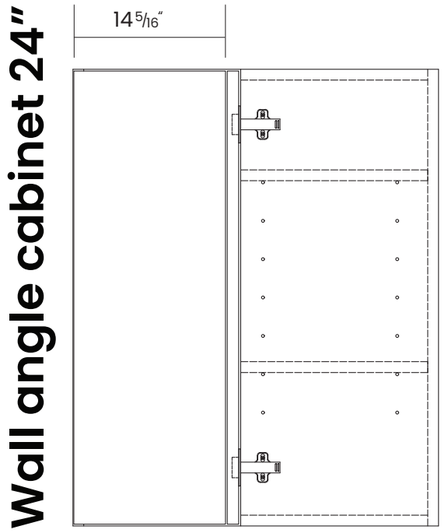

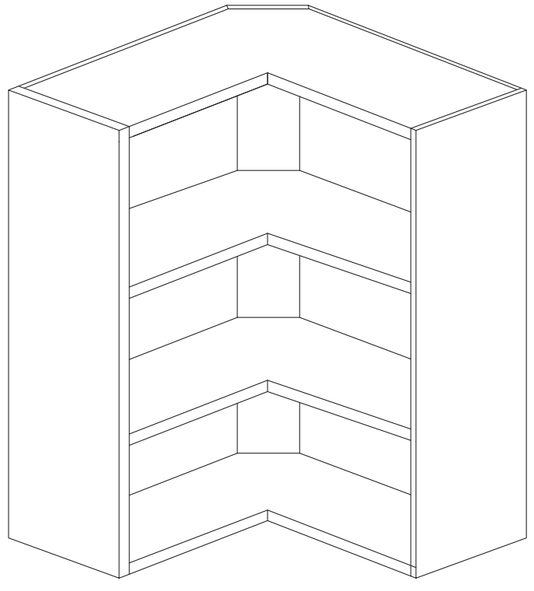



Wall Cabinets Introduction

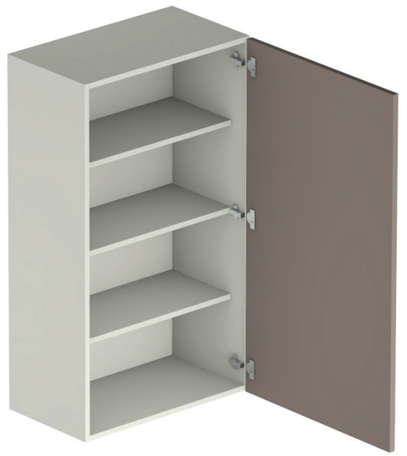

Wall Cabinets

Efficiently utilize vertical space and keep your counter tops clear from clutter without the loss of luxury and refinement.

Cabinet Code Example

A wall cabinet that is 18" wide by 42" tall.

Code	Width	Height	Depth
W1842	18	42	13

SKU code is **W1842.**

Designer/Owner Recommendations

Consider the placement of wall cabinets to maximize functionality and aesthetics. Position them at a comfortable height for easy access and ensure they are evenly spaced for a balanced look.

Regularly clean and maintain your framed wall cabinets to ensure they remain in optimal condition. Use a gentle cleaning solution and soft cloth to remove dust and debris, and avoid harsh chemicals or abrasive materials that could damage the finish,

Installation Notes

Ensure that your wall cabinets are level and installed securely. Use appropriate hardware and mounting techniques to prevent sagging or shifting over time.

Utilize interior accessories such as adjustable shelves to optimize storage space and organization within the cabinets. This will help make the most of the available space and keep all items neatly organized.

Wall Cabinets

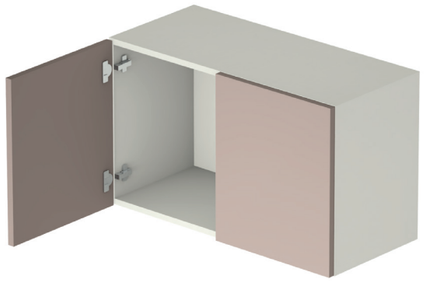

Wall Cabinet 12" High Double Door

Code	Description	Width	Height	Depth	Price
CAPW2412	Double Door No Shelf	24	12	13	$300
CAPW3012	Double Door No Shelf	30	12	13	$337
CAPW3312	Double Door No Shelf	33	12	13	$356
CAPW3612	Double Door No Shelf	36	12	13	$375

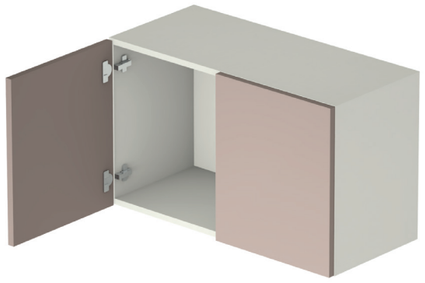

Wall Cabinet 15" High Double Door

Code	Description	Width	Height	Depth	Price
CAPW2415	Double Door No Shelf	24	15	13	$327
CAPW3015	Double Door No Shelf	30	15	13	$368
CAPW3315	Double Door No Shelf	33	15	13	$387
CAPW3615	Double Door No Shelf	36	15	13	$407

Wall Cabinets

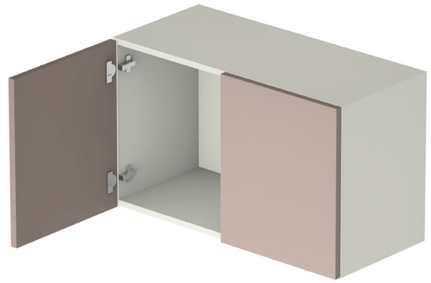

Wall Cabinet 18" High Double Door

Code	Description	Width	Height	Depth	Price
CAPW2418	Double Door No Shelf	24	18	13	$356
CAPW3018	Double Door No Shelf	30	18	13	$399
CAPW3318	Double Door No Shelf	33	18	13	$420
CAPW3618	Double Door No Shelf	36	18	13	$442

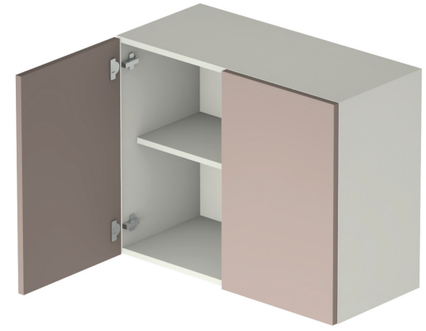

Wall Cabinet 24" High Double Door

Code	Description	Width	Height	Depth	Price
CAPW2424	Double Door 1 Adjustable Shelf	24	24	13	$458
CAPW3024	Double Door 1 Adjustable Shelf	30	24	13	$517
CAPW3324	Double Door 1 Adjustable Shelf	33	24	13	$547
CAPW3624	Double Door 1 Adjustable Shelf	36	24	13	$576

Wall Cabinets

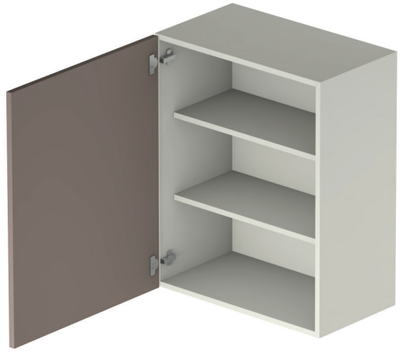

Wall Cabinet 30" High Single Door

Code	Description	Width	Height	Depth	Price
CAPW0930	Single Door 2 Adjustable Shelves	9	30	13	$348
CAPW1230	Single Door 2 Adjustable Shelves	12	30	13	$381
CAPW1530	Single Door 2 Adjustable Shelves	15	30	13	$418
CAPW1830	Single Door 2 Adjustable Shelves	18	30	13	$456
CAPW2130	Single Door 2 Adjustable Shelves	21	30	13	$493

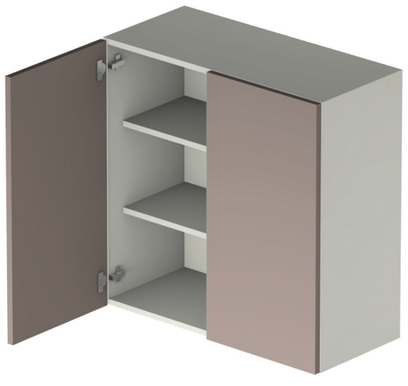

Wall Cabinet 30" High Double Door

Code	Description	Width	Height	Depth	Price
CAPW2430-2	Double Door 2 Adjustable Shelves	24	30	13	$560
CAPW2730	Double Door 2 Adjustable Shelves	27	30	13	$598
CAPW3030	Double Door 2 Adjustable Shelves	30	30	13	$636
CAPW3330	Double Door 2 Adjustable Shelves	33	30	13	$673
CAPW3630	Double Door 2 Adjustable Shelves	36	30	13	$712

Wall Cabinets



Wall Cabinet 36" High Single Door

Code	Description	Width	Height	Depth	Price
CAPW0936	Single Door 3 Adjustable Shelves	9	36	13	$407
CAPW1236	Single Door 3 Adjustable Shelves	12	36	13	$442
CAPW1536	Single Door 3 Adjustable Shelves	15	36	13	$481
CAPW1836	Single Door 3 Adjustable Shelves	18	36	13	$521
CAPW2136	Single Door 3 Adjustable Shelves	21	36	13	$562

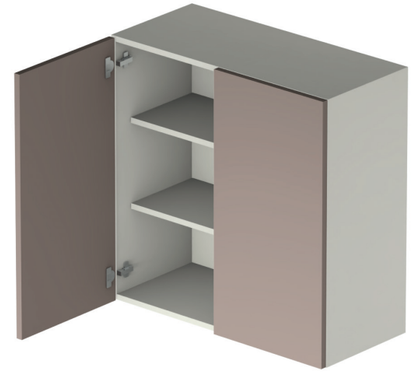

Wall Cabinet 36" High Double Door

Code	Description	Width	Height	Depth	Price
CAPW2436-2	Double Door 2 Adjustable Shelves	24	36	13	$645
CAPW2736	Double Door 2 Adjustable Shelves	27	36	13	$686
CAPW3036	Double Door 2 Adjustable Shelves	30	36	13	$726
CAPW3336	Double Door 2 Adjustable Shelves	33	36	13	$767
CAPW3636	Double Door 2 Adjustable Shelves	36	36	13	$807

Wall Cabinets



Wall Cabinet 42" High Single Door

Code	Description	Width	Height	Depth	Price
CAPW0942	Single Door 3 Adjustable Shelves	9	42	13	$469
CAPW1242	Single Door 3 Adjustable Shelves	12	42	13	$511
CAPW1542	Single Door 3 Adjustable Shelves	15	42	13	$558
CAPW1842	Single Door 3 Adjustable Shelves	18	42	13	$607
CAPW2142	Single Door 3 Adjustable Shelves	21	42	13	$655



Wall Cabinet 42" High Double Door

Code	Description	Width	Height	Depth	Price
CAPW2442-2	Double Door 3 Adjustable Shelves	24	42	13	$746
CAPW2742	Double Door 3 Adjustable Shelves	27	42	13	$795
CAPW3042	Double Door 3 Adjustable Shelves	30	42	13	$844
CAPW3342	Double Door 3 Adjustable Shelves	33	42	13	$893
CAPW3642	Double Door 3 Adjustable Shelves	42	42	13	$942

Wall Cabinets

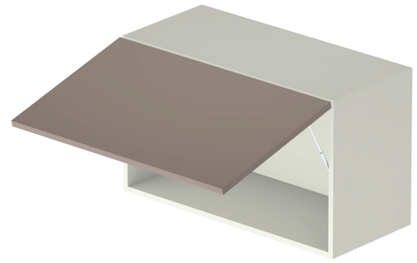

Capri Wall Bridge Lift Up

Code	Description	Width	Height	Depth	Price
CAPW2412UP	Single Door	24	12	13	$438
CAPW3012UP	Single Door	30	12	13	$475
CAPW3312UP	Single Door	33	12	13	$493
CAPW3612UP	Single Door	36	12	13	$512

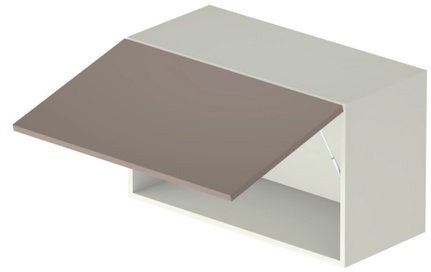

Capri Wall Bridge Lift Up

Code	Description	Width	Height	Depth	Price
CAPW2415UP	Single Door	24	15	13	$465
CAPW3015UP	Single Door	30	15	13	$505
CAPW3315UP	Single Door	33	15	13	$525
CAPW3615UP	Single Door	36	15	13	$545

Wall Cabinets

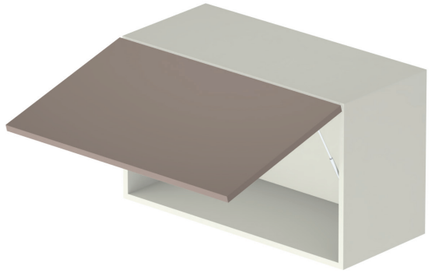

Capri Wall Bridge Lift Up

Code	Description	Width	Height	Depth	Price
CAPW2418UP	Single Door	24	18	13	$494
CAPW3018UP	Single Door	30	18	13	$536
CAPW3318UP	Single Door	33	18	13	$558
CAPW3618UP	Single Door	36	18	13	$579

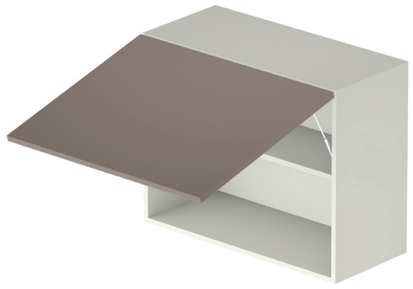

Capri Wall Bridge Lift Up

Code	Description	Width	Height	Depth	Price
CAPW2424UP	Single Door 1 Shelf	24	24	13	$762
CAPW3024UP	Single Door 1 Shelf	30	24	13	$821
CAPW3324UP	Single Door 1 Shelf	33	24	13	$850
CAPW3624UP	Single Door 1 Shelf	36	24	13	$880

Wall Cabinets

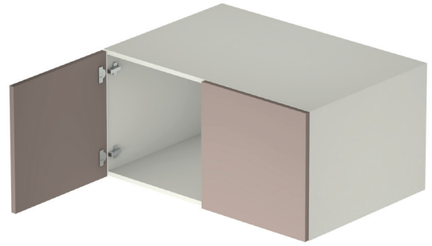

Capri Wall Refrigerator Cabinet

Code	Description	Width	Height	Depth	Price
CAPW361224	Double Door	36	12	24	$555
CAPW361524	Double Door	36	15	24	$594
CAPW361824	Double Door	36	18	24	$634

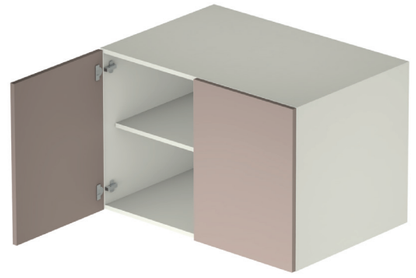

Capri Wall Refrigerator Cabinet

Code	Description	Width	Height	Depth	Price
CAPW362424	Double Door 1 Adjustable Shelf	36	24	24	$836

Wall Cabinets



Capri Wall Blind Corner

Code	Description	Width	Height	Depth	Price
CAPWBC3030	Single Door 2 Adjustable Shelves	30	30	13	$635
CAPWBC3630	Single Door 2 Adjustable Shelves	36	30	13	$711



Capri Wall Blind Corner

Code	Description	Width	Height	Depth	Price
CAPWBC3036	Single Door 3 Adjustable Shelves	30	36	13	$717
CAPWBC3636	Single Door 3 Adjustable Shelves	36	36	13	$798

Wall Cabinets



Capri Wall Blind Corner

Code	Description	Width	Height	Depth	Price
CAPWBC3042	Single Door 3 Adjustable Shelves	30	42	13	$840
CAPWBC3642	Single Door 3 Adjustable Shelves	36	42	13	$938

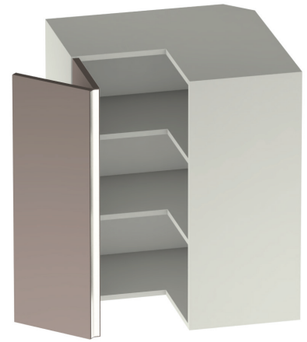

Capri Wall Easy Reach

Code	Description	Width	Height	Depth	Price
CAPWEZR2430	Single Door 2 Adjustable Shelves	24	30	13	$833

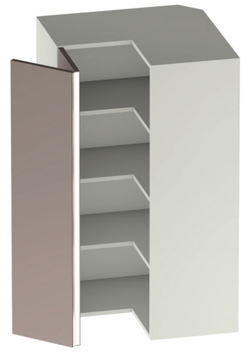

Capri Wall Easy Reach

Code	Description	Width	Height	Depth	Price
CAPWEZR2436	Single Door 3 Adjustable Shelves	24	36	13	$913
CAPWEZR2442	Single Door 3 Adjustable Shelves	24	42	13	$1,091



BASE CABINETS

Base Cabinets Introduction

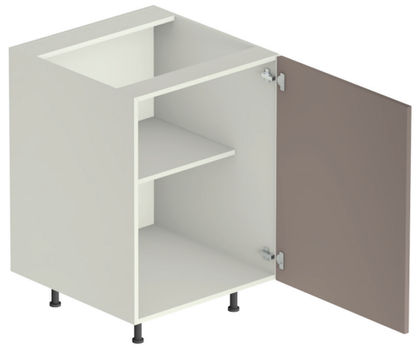

Base Cabinets

Choose from a wide range of base cabinets to suit your individual tastes and preferences.

Cabinet Code Example

A base cabinet that is 6" wide by 34.5" tall.

Code	Width	Height	Depth
CAPBFHD6	6	34.5	24

SKU code is **CAPBFHD6**

Note that the standard height of a base cabinet is 34.5" and the standard depth is 24".

Designer/Owner Recommendations

Measure the space carefully and choose base cabinets that fit seamlessly into the layout. Consider the dimensions of the room, as well as any appliances or fixtures that the cabinets will need to accommodate.

Regularly clean and maintain your framed wall cabinets to ensure they remain in optimal condition. Use a gentle cleaning solution and soft cloth to remove dust and debris, and avoid harsh chemicals or abrasive materials that could damage the finish,

Installation Notes

Before installation carefully inspect the construction of all cabinets. If a cabinet has a critical flaw be sure to set it aside and contact us for claim damage. Pictures will be requested of any cabinets with defects or faults and must be submitted before a claim can be filed into production.

Perform a final inspection to ensure that all base cabinets are installed properly for stability and functionality. Use appropriate mounting hardware for installation to prevent sagging or shifting over time.

Base Cabinets

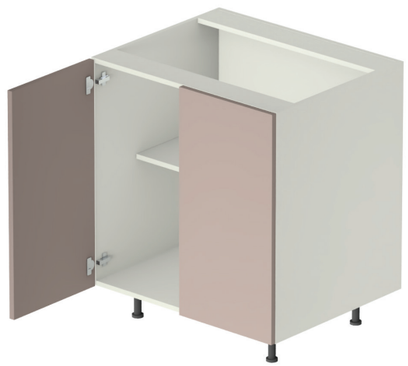

Capri Full Height Base

Code	Description	Width	Height	Depth	Price
CAPBFHD24-2	Double Door 1 Adjustable Shelf	24	34.5	24	$634
CAPBFHD27	Double Door 1 Adjustable Shelf	27	34.5	24	$674
CAPBFHD30	Double Door 1 Adjustable Shelf	30	34.5	24	$715
CAPBFHD33	Double Door 1 Adjustable Shelf	33	34.5	24	$755
CAPBFHD36	Double Door 1 Adjustable Shelf	36	34.5	24	$795

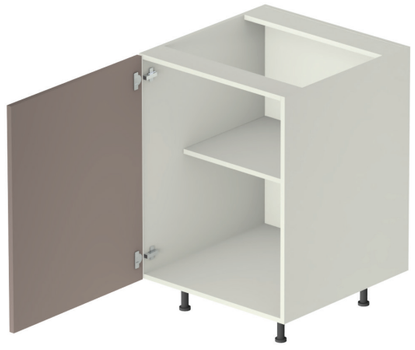

Capri Full Height Base

Code	Description	Width	Height	Depth	Price
CAPBFHD6	Single Door 1 Adjustable Shelf	6	34.5	24	$396
CAPBFHD9	Single Door 1 Adjustable Shelf	9	34.5	24	$432
CAPBFHD12	Single Door 1 Adjustable Shelf	12	34.5	24	$466
CAPBFHD15	Single Door 1 Adjustable Shelf	15	34.5	24	$502
CAPBFHD18	Single Door 1 Adjustable Shelf	18	34.5	24	$537
CAPBFHD21	Single Door 1 Adjustable Shelf	21	34.5	24	$572

Base Cabinets

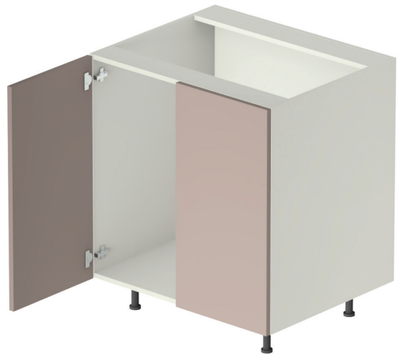

Capri Sink Base

Code	Description	Width	Height	Depth	Price
CAPSB30	Double Door	30	34.5	24	$646
CAPSB33	Double Door	33	34.5	24	$680
CAPSB36	Double Door	36	34.5	24	$713

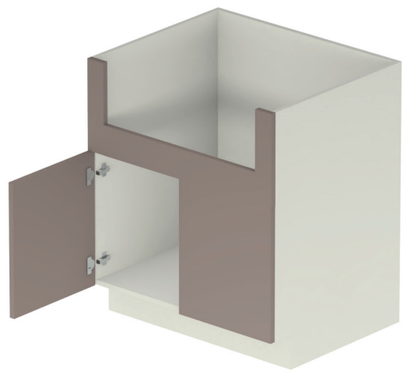

Capri Farm Sink Base

Code	Description	Width	Height	Depth	Price
CAPFSB30	Double Door 1 False Panel	30	34.5	24	$810
CAPFSB33	Double Door 1 False Panel	33	34.5	24	$820
CAPFSB36	Double Door 1 False Panel	36	34.5	24	$830

Base Cabinets

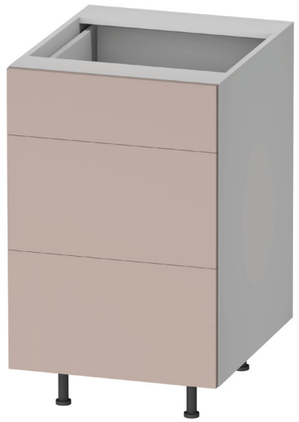

Capri Base 3 Drawers

Code	Description	Width	Height	Depth	Price
CAP3DB12	3 Drawers	12	34.5	24	$973
CAP3DB15	3 Drawers	15	34.5	24	$1,031
CAP3DB18	3 Drawers	18	34.5	24	$1,089
CAP3DB21	3 Drawers	21	34.5	24	$1,146
CAP3DB24	3 Drawers	24	34.5	24	$1,204
CAP3DB27	3 Drawers	27	34.5	24	$1,267
CAP3DB30	3 Drawers	30	34.5	24	$1,330
CAP3DB33	3 Drawers	33	34.5	24	$1,392
CAP3DB36	3 Drawers	36	34.5	24	$1,455



Capri Base 2 Drawers

Code	Description	Width	Height	Depth	Price
CAP2DB15	2 Drawers	15	34.5	24	$908
CAP2DB18	2 Drawers	18	34.5	24	$958
CAP2DB21	2 Drawers	21	34.5	24	$1,009
CAP2DB24	2 Drawers	24	34.5	24	$1,059
CAP2DB27	2 Drawers	27	34.5	24	$1,115
CAP2DB30	2 Drawers	30	34.5	24	$1,170
CAP2DB33	2 Drawers	33	34.5	24	$1,226
CAP2DB36	2 Drawers	36	34.5	24	$1,281

Base Cabinets



Capri Corner Base

Code	Description	Width	Height	Depth	Price
CAPALS33	Single Door 1 Adjustable Shelf	33	34.5	24	$1,108
CAPALS36	Single Door 1 Adjustable Shelf	36	34.5	24	$1,229



Capri Blind Corner Base

Code	Description	Width	Height	Depth	Price
CAPBCB42	Single Door 1 Adjustable Shelf	42	34.5	24	$926
CAPBCB45	Single Door 1 Adjustable Shelf	45	34.5	24	$969
CAPBCB48	Single Door 1 Adjustable Shelf	48	34.5	24	$1,011

Base Cabinets



Capri Microwave Base

Code	Description	Width	Height	Depth	Price
CAPMB30	Single Drawer	30	34.5	24	$981



Capri Oven Base

Code	Description	Width	Height	Depth	Price
CAPOB30	Capri Oven Base	30	34.5	24	$593

Tall Cabinets



Capri Utility Cabinet

Code	Description	Width	Height	Depth	Price
CAPUC1584	Double Door 4 Adjustable Shelves	15	84	24	$1,269
CAPUC1590	Double Door 5 Adjustable Shelves	15	90	24	$1,328
CAPUC1596	Double Door 5 Adjustable Shelves	15	96	24	$1,447



Capri Utility Cabinet

Code	Description	Width	Height	Depth	Price
CAPUC1884	Double Door 4 Adjustable Shelves	18	84	24	$1,369
CAPUC1890	Double Door 5 Adjustable Shelves	18	90	24	$1,430
CAPUC1896	Double Door 5 Adjustable Shelves	18	96	24	$1,560

Tall Cabinets



Capri Utility Cabinet

Code	Description	Width	Height	Depth	Price
CAPUC2484	Double Door 4 Adjustable Shelves	24	84	24	$1,635
CAPUC2490	Double Door 5 Adjustable Shelves	24	90	24	$1,699
CAPUC2496	Double Door 5 Adjustable Shelves	24	96	24	$1,864



Capri Utility Cabinet

Code	Description	Width	Height	Depth	Price
CAPUC3084	Four Door 4 Adjustable Shelves	30	84	24	$1,856
CAPUC3090	Four Door 5 Adjustable Shelves	30	90	24	$1,926
CAPUC3096	Four Door 5 Adjustable Shelves	30	96	24	$2,115

Tall Cabinets



Capri Utility Cabinet

Code	Description	Width	Height	Depth	Price
CAPUC3684	Four Door 4 Adjustable Shelves	36	84	24	$2,078
CAPUC3690	Four Door 5 Adjustable Shelves	36	90	24	$2,152
CAPUC3696	Four Door 5 Adjustable Shelves	36	96	24	$2,365

Tall Cabinets



Capri Oven Cabinet

Code	Description	Width	Height	Depth	Price
CAPOC3084	Double Door 1 Drawer	30	84	24	$1,983
CAPOC3090	Double Door 1 Drawer	30	90	24	$2,118

Tall Cabinets



Capri Oven Cabinet

Code	Description	Width	Height	Depth	Price
CAPOC3096	Double Door 1 Adjustable Shelf 1 Drawer	30	96	24	$2,238



Vanity Cabinets Introduction

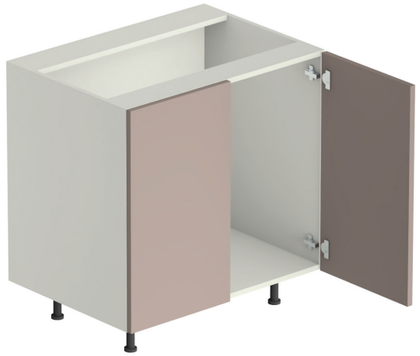

Vanity Cabinets

Choose from a wide range of vanity cabinets and customize smaller spaces.

Cabinet Code Example

A vanity sink base cabinet at 24" wide by 31.5" tall and 21” deep.

Code	Width	Height	Depth
CAPVSB24	24	31.5	21

SKU code is **CAPVSB24**

Note that the standard height of a vanity cabinet is 31.5” and the standard depth is 21”.

Designer/Owner Recommendations

Ensure that any selection or combination of vanity cabinets are properly sized to fit within the install space while also accommodating plumbing fixtures. Adornus will not alter these cabinets for plumbing fixtures and any modifications for plumbing will need to be done on site via the installer / contractor.

Installation Notes

Before installation carefully inspect the construction of all cabinets. If a cabinet has a critical flaw be sure to set it aside and contact us for claim damage. Pictures will be requested of any cabinets with defects or faults and must be submitted before a claim can be filed into production.

Vanity Cabinets

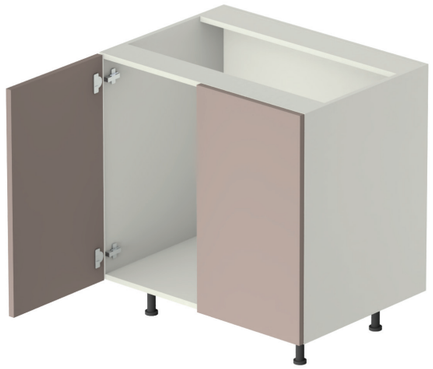

Capri Vanity Sink Base

Code	Description	Width	Height	Depth	Price
CAPVSB24	Double Door	24	31.5	21	$523
CAPVSB30	Double Door	30	31.5	21	$587
CAPVSB36	Double Door	36	31.5	21	$651

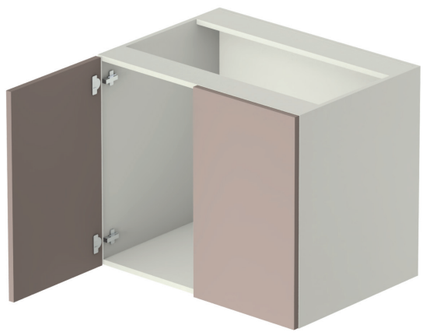

Capri Vanity Sink Base Floating

Code	Description	Width	Height	Depth	Price
CAPVSB24F	Double Door	24	25.5	21	$480
CAPVSB30F	Double Door	30	25.5	21	$538
CAPVSB36F	Double Door	36	25.5	21	$651

Vanity Cabinets



Capri Vanity 2 Drawer Base

Code	Description	Width	Height	Depth	Price
CAPVDB12-2	2 Drawers	12	31.5	21	$795
CAPVDB15-2	2 Drawers	15	31.5	21	$843
CAPVDB18-2	2 Drawers	18	31.5	21	$891

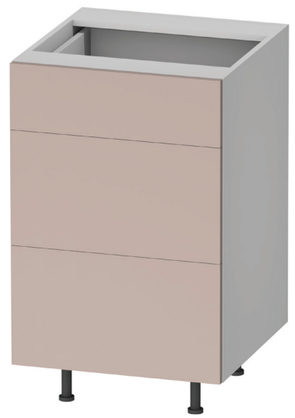

Capri Vanity 3 Drawer Base

Code	Description	Width	Height	Depth	Price
CAPVDB12-3	3 Drawers	12	31.5	21	$875
CAPVDB15-3	3 Drawers	15	31.5	21	$966
CAPVDB18-3	3 Drawers	18	31.5	21	$1,021



CAPRI GOLA CABINETS

Capri Gola Base Cabinets



Capri Gola Full Height Base

Code	Description	Width	Height	Depth	Price
CAPBFHD6G	Single Door 1 Adjustable Shelf	6	34.5	24	$396
CAPBFHD9G	Single Door 1 Adjustable Shelf	9	34.5	24	$432
CAPBFHD12G	Single Door 1 Adjustable Shelf	12	34.5	24	$466
CAPBFHD15G	Single Door 1 Adjustable Shelf	15	34.5	24	$502
CAPBFHD18G	Single Door 1 Adjustable Shelf	18	34.5	24	$537
CAPBFHD21G	Single Door 1 Adjustable Shelf	21	34.5	24	$572
CAPBFHD24-SG	Single Door 1 Adjustable Shelf	24	34.5	24	$634



Capri Gola Full Height Base

Code	Description	Width	Height	Depth	Price
CAPBFHD24-2G	Double Door 1 Adjustable Shelf	24	34.5	24	$634
CAPBFHD27G	Double Door 1 Adjustable Shelf	27	34.5	24	$674

Capri Gola Base Cabinets



Capri Gola Full Height Base

Code	Description	Width	Height	Depth	Price
CAPBFHD30G	Double Door 1 Adjustable Shelf	30	34.5	24	$715
CAPBFHD33G	Double Door 1 Adjustable Shelf	33	34.5	24	$755
CAPBFHD36G	Double Door 1 Adjustable Shelf	36	34.5	24	$795



Capri Gola Sink Base

Code	Description	Width	Height	Depth	Price
CAPSB30G	Double Door	30	34.5	24	$646
CAPSB33G	Double Door	33	34.5	24	$680
CAPSB36G	Double Door	36	34.5	24	$713

Capri Gola Base Cabinets



Capri Gola Base 2 Drawers

Code	Description	Width	Height	Depth	Price
CAP2DB15G	2 Drawers	15	34.5	24	$908
CAP2DB18G	2 Drawers	18	34.5	24	$958
CAP2DB21G	2 Drawers	21	34.5	24	$1,009
CAP2DB24G	2 Drawers	24	34.5	24	$1,059
CAP2DB27G	2 Drawers	27	34.5	24	$1,115
CAP2DB30G	2 Drawers	30	34.5	24	$1,170
CAP2DB33G	2 Drawers	33	34.5	24	$1,226
CAP2DB36G	2 Drawers	36	34.5	24	$1,281



Capri Gola Base 3 Drawers

Code	Description	Width	Height	Depth	Price
CAP3DB12G	3 Drawers	12	34.5	24	$973
CAP3DB15G	3 Drawers	15	34.5	24	$1,031
CAP3DB18G	3 Drawers	18	34.5	24	$1,089
CAP3DB21G	3 Drawers	21	34.5	24	$1,146
CAP3DB24G	3 Drawers	24	34.5	24	$1,204
CAP3DB27G	3 Drawers	27	34.5	24	$1,267
CAP3DB30G	3 Drawers	30	34.5	24	$1,330
CAP3DB33G	3 Drawers	33	34.5	24	$1,392
CAP3DB36G	3 Drawers	36	34.5	24	$1,455

Capri Gola Base Cabinets



Capri Gola Blind Corner Base

Code	Description	Width	Height	Depth	Price
CAPBCB42G	Single Door 1 Adjustable Shelf	42	34.5	24	$926
CAPBCB45G	Single Door 1 Adjustable Shelf	45	34.5	24	$969
CAPBCB48G	Single Door 1 Adjustable Shelf	48	34.5	24	$1,011

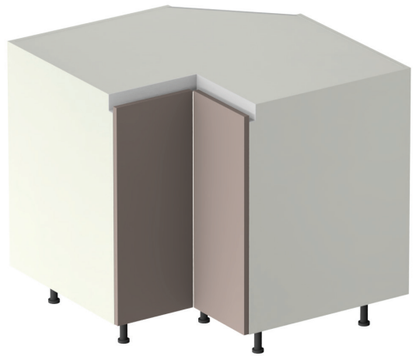

Capri Gola Corner Base

Code	Description	Width	Height	Depth	Price
CAPCB33G	Single Door 1 Adjustable Shelf	33	34.5	24	$1,108
CAPCB36G	Single Door 1 Adjustable Shelf	36	34.5	24	$1,229

Capri Gola Tall Cabinets



Capri Gola Utility Cabinet

Code	Description	Width	Height	Depth	Price
CAPUC1584G	Double Door 4 Adjustable Shelves	15	84	24	$1,269
CAPUC1590G	Double Door 5 Adjustable Shelves	15	90	24	$1,328
CAPUC1596G	Double Door 5 Adjustable Shelves	15	96	24	$1,447



Capri Gola Utility Cabinet

Code	Description	Width	Height	Depth	Price
CAPUC1884G	Double Door 4 Aadjustable Shelves	18	84	24	$1,369
CAPUC1890G	Double Door 5 Adjustable Shelves	18	90	24	$1,430
CAPUC1896G	Double Door 5 Adjustable Shelves	18	96	24	$1,560

Capri Gola Tall Cabinets



Capri Gola Utility Cabinet

Code	Description	Width	Height	Depth	Price
CAPUC2484G	Double Door 4 Adjustable Shelves	24	84	24	$1,635
CAPUC2490G	Double Door 5 Adjustable Shelves	24	90	24	$1,699
	Double Door 5 Adjustable Shelves	24	96	24	$1,864



Capri Gola Utility Cabinet

Code	Description	Width	Height	Depth	Price
CAPUC3084G	Four Door 4 Adjustable Shelves	30	84	24	$1,856
CAPUC3090G	Four Door 5 Adjustable Shelves	30	90	24	$1,926
CAPUC3096G	Four Door 5 Adjustable Shelves	30	96	24	$2,115

Capri Gola Tall Cabinets



Capri Gola Utility Cabinet

Code	Description	Width	Height	Depth	Price
CAPUC3684G	Four Door 4 Adjustable Shelves	36	84	24	$2,078
CAPUC3690G	Four Door 5 Adjustable Shelves	36	90	24	$2,152
CAPUC3696G	Four Door 5 Adjustable Shelves	36	96	24	$2,365



Capri Gola Oven Cabinet

Code	Description	Width	Height	Depth	Price
CAPOC3084G	Double Door 1 Drawer	30	84	24	$1,803
CAPOC3090G	Double Door 1 Drawer 1 Adjustable Shelf	30	90	24	$1,926
CAPOC3096G	Double Door 1 Drawer 2 Adjustable Shelves	30	96	24	$2,034

Capri Gola Vanity Cabinets



Capri Gola Vanity Sink Base

Code	Description	Width	Height	Depth	Price
CAPVSB24G	Double Door	24	31.5	21	$523
CAPVSB30G	Double Door	30	31.5	21	$587
CAPVSB36G	Double Door	36	31.5	21	$651



Capri Gola Vanity 2 Drawer Base

Code	Description	Width	Height	Depth	Price
CAPVDB12-2G	2 Drawers	12	31.5	21	$843
CAPVDB15-2G	2 Drawers	15	31.5	21	$891
CAPVDB18-2G	2 Drawers	18	31.5	21	$891

Capri Gola Vanity Cabinets



Capri Gola Vanity 3 Drawer Base

Code	Description	Width	Height	Depth	Price
CAPVDB12-3G	3 Drawers	12	31.5	21	$910
CAPVDB15-3G	3 Drawers	15	31.5	21	$966
CAPVDB18-3G	3 Drawers	18	31.5	21	$1,021



Capri Gola Vanity Sink Base Floating

Code	Description	Width	Height	Depth	Price
CAPVSB24GF	Double Door	24	25.5	21	$480
CAPVSB30GF	Double Door	30	25.5	21	$538
CAPVSB36GF	Double Door	36	25.5	21	$597

Capri Gola Vanity Cabinets

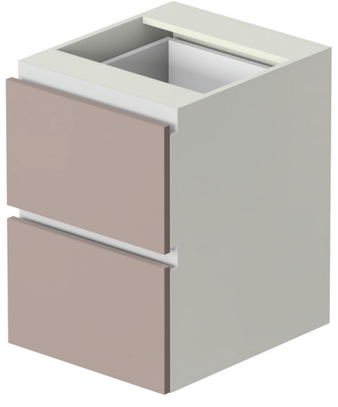

Capri Gola Vanity 2 Drawer Base Floating

Code	Description	Width	Height	Depth	Price
CAPVDB12-2GF	2 Drawers	12	25.5	21	$763
CAPVDB15-2GF	2 Drawers	15	25.5	21	$811
CAPVDB18-2GF	2 Drawers	18	25.5	21	$829

Capri Gola Vanity Cabinets

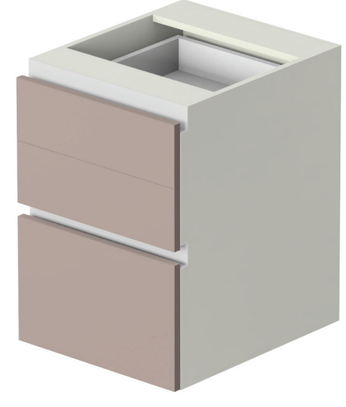

Capri Gola Vanity 3 Drawer Base Floating

Code	Description	Width	Height	Depth	Price
CAPVDB12-3GF	3 Drawers	12	25.5	21	$875
CAPVDB15-3GF	3 Drawers	15	25.5	21	$928
CAPVDB18-3GF	3 Drawers	18	25.5	21	$982



Accessory Introduction



Accessories, Panels and Moldings

Choose from a wide range of accessories, panels and mouldings

SKU Code

Accessories item SKUs will differ greatly depending on the type of item. It is important to review all measurements or notes per item ordered to ensure you are getting the correct item based on job needs.

Designer/Owner Recommendations

It's better to order extra than the exact amount in most cases as mistakes or adjustments will likely happen during the install. Ordering slightly more than projected will help to prevent delays with job completion. Adornus recommends ordering extra moldings, fillers, or toe kicks.

Installation Notes

Before installation carefully inspect all accessory items. If an item has a critical flaw be sure to set it aside and contact us for claim damage. Pictures will be requested of any items with defects or faults and must be submitted before a claim can be filed into production.



White C Channel 105"

Code	Description	Width	Height	Depth	Price
U8007V01L27	White C Channel 105"				$429



Black C Channel 105"

Code	Description	Width	Height	Depth	Price
U8007V12L27	Black C Channel 105"				$429



Aluminum C Channel 105"

Code	Description	Width	Height	Depth	Price
U800750SL27	Aluminum C Channel 105"				$429



White L Channel 105"

Code	Description	Width	Height	Depth	Price
U8006V01L27	White L Channel 105"				$429

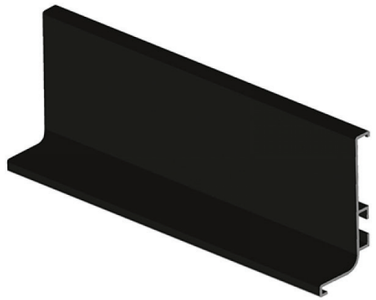

Black L Aluminum Channel 105"

Code	Description	Width	Height	Depth	Price
U8006V12L27	Black L Aluminum Channel 105"				$429



Aluminum L Channel 105"

Code	Description	Width	Height	Depth	Price
800650SL27	Aluminum L Channel 105"				$429

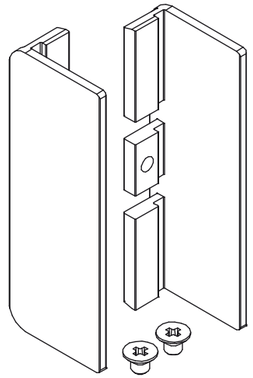

Closed End Cap for C, Paired Set (White)

Code	Description	Width	Height	Depth	Price
UCF8007TPIV01	Closed End Cap for C, Paired Set (White)				$179

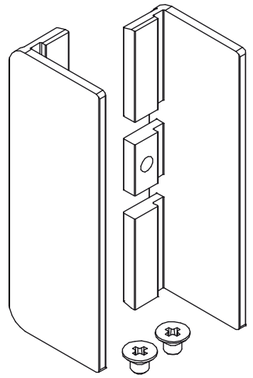

Closed End Cap for C, Paired Set (Black)

Code	Description	Width	Height	Depth	Price
UCF8007TPIV12	Closed End Cap for C, Paired Set (Black)				$179

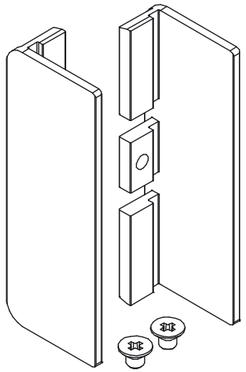

Closed End Cap for C, Paired Set (Aluminum)

Code	Description	Width	Height	Depth	Price
UCF8007TPI50S	Closed End Cap for C, Paired Set (Aluminum)				$179



Closed End Cap for L, Paired Set (White)

Code	Description	Width	Height	Depth	Price
UCF8006TPV01C	Closed End Cap for L, Paired Set (White)				$179



Closed End Cap for L, Paired Set (Black)

Code	Description	Width	Height	Depth	Price
UCF8006TPV12C	Closed End Cap for L, Paired Set (Black)				$179

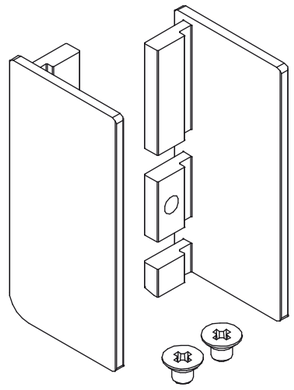

Closed End Cap for L, Paired Set (Aluminum)

Code	Description	Width	Height	Depth	Price
UCF8006TP50SC	Closed End Cap for L, Paired Set (Aluminum)				$179

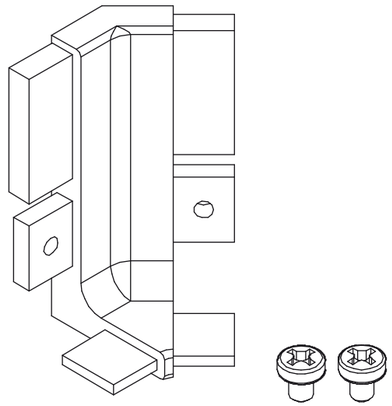

Internal Corner Connector for Lazy Susan/BBC White

Code	Description	Width	Height	Depth	Price
UAG8006-V12	Internal Corner Connector for Lazy Susan/BBC White				$286

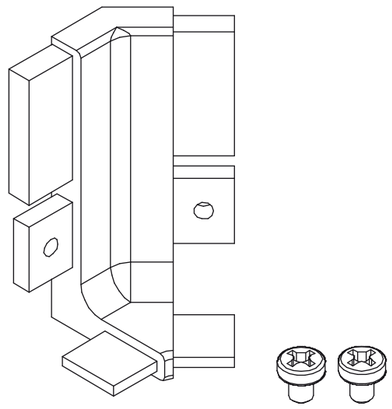

Internal Corner Connector for Lazy Susan/BBC Black

Code	Description	Width	Height	Depth	Price
UAG8006-V12	Internal Corner Connector for Lazy Susan/BBC Black				$286

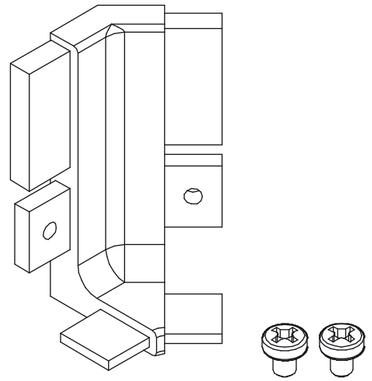

Internal Corner Connector (Aluminum)

Code	Description	Width	Height	Depth	Price
UAG8006-50S	Internal Corner Connector (Aluminum)				$286

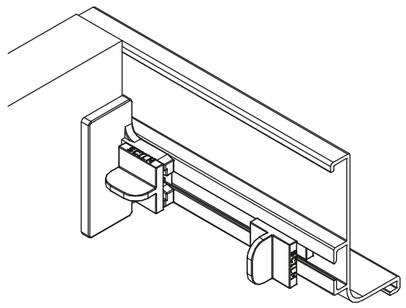

Clips to Attach Gola Accessories to Cabinet (Pair)

Code	Description	Width	Height	Depth	Price
SU136	Clips to Attach Gola Accessories to Cabinet (Pair)				$7



Filler

Code	Description	Width	Height	Depth	Price
F330	Edgebanded 4 Sides	3	30	0.75	$34
F336	Edgebanded 4 Sides	3	36	0.75	$41
F342	Edgebanded 4 Sides	3	42	0.75	$47



Filler

Code	Description	Width	Height	Depth	Price
F630	Edgebanded 4 Sides	6	30	0.75	$67
F636	Edgebanded 4 Sides	6	36	0.75	$81
F642	Edgebanded 4 Sides	6	42	0.75	$94

Filler

Code	Description	Width	Height	Depth	Price
F384	Edgebanded 4 Sides	3	84	0.75	$94
F390	Edgebanded 4 Sides	3	90	0.75	$101
F396	Edgebanded 4 Sides	3	96	0.75	$107



Filler

Code	Description	Width	Height	Depth	Price
F684	Edgebanded 4 Sides	6	84	0.75	$188
F690	Edgebanded 4 Sides	6	90	0.75	$202
F696	Edgebanded 4 Sides	6	96	0.75	$214

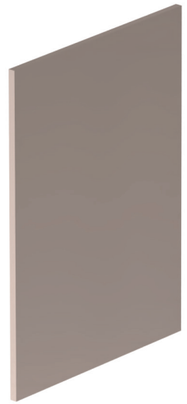

Base End Panel

Code	Description	Width	Height	Depth	Price
BEP24.7534.5	Full Panel	24.75	34.5	0.75	$318

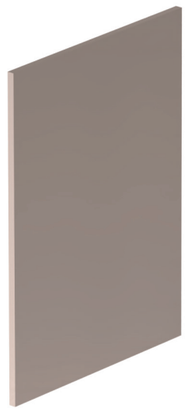

Base End Panel

Code	Description	Width	Height	Depth	Price
BEP2225.5	Base End Panel - Floating Vanity	22	22	0.75	$209
BEP2231.5	Base End Panel - Floating Vanity	22	22	0.75	$258

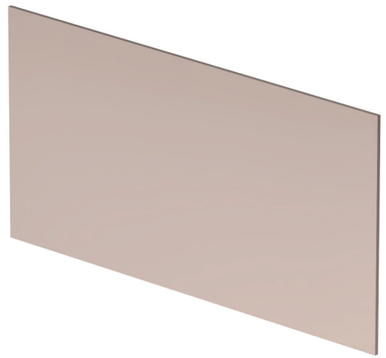

Custom Size Panel

Code	Description	Width	Height	Depth	Price
C Panel	Custom Size Panel				$54 SQFT



Wall End Panel

Code	Description	Width	Height	Depth	Price
WEP1412	Wall End Panel	14	12	0.75	$63
WEP1415	Wall End Panel	14	15	0.75	$79
WEP1418	Wall End Panel	14	18	0.75	$94
WEP1421	Wall End Panel	14	21	0.75	$110
WEP1424	Wall End Panel	14	24	0.75	$125
WEP1430	Wall End Panel	14	30	0.75	$157
WEP1436	Wall End Panel	14	36	0.75	$188
WEP1442	Wall End Panel	14	42	0.75	$219

Panels, Fillers and Trim



Tall End Panel

Code	Description	Width	Height	Depth	Price
TEP247584	Full Panel	0.75	84	24.75	$774
TEP247590	Full Panel	0.75	90	24.75	$829
TEP247596	Full Panel	0.75	96	24.75	$884

Toe Kick Door Material

Code	Description	Width	Height	Depth	Price
TK96	Toe Kick Door Material	96	4.5	0.75	$179

Panels, Fillers and Trim



Aluminum Toe Kick

Code	Description	Width	Height	Depth	Price
ATK	Aluminum Toe Kick	4.3125	105		$179

adornus™

Alusso Series

Other Adornus Collections to consider!

Metropolitan

New level of luxury to the modern home.

Select from glossy, matte, or textured finishes.

Essential | Frameless

The solution for Semi-custom cabinetry.

Modify width, height, and depth within specs.

Miami Warehouse

10400 NW 21st Suite 115 Doral, Florida 33172

305.629.4800

New Jersey Warehouse

5 Santa Fe Way, Suite 501 East Windsor, NJ 08512

201.577.5421

www.adornus.com