adornus™

Essential Series

Specification Guide 2026



Table Of Contents

- About Essential Series..... 3
- Limited Lifetime Warranty..... 4-6
- Policies & Procedures..... 7-8
- Door Style Options..... 9
- Color-Up..... 10
- Soho Door Style 11
- SOHO Door Style Options 12
- Essential Series 13-16
- Box Construction..... 17
- Door Sizing 18
- Full Access Cabinet Specifications..... 19-24

Wall Cabinets

- Wall Cabinets Introduction..... 25-26
- Wall Cabinet SKU Listing..... 27-40

Base Cabinets

- Base Cabinets Introduction..... 41-42
- Base Cabinet SKU Listing..... 43-52

Vanity Cabinets

- Vanity Cabinets Introduction..... 53-54
- Vanity Cabinet SKU Listing..... 55-56

Accessories

- Accessory Introduction..... 57-58
- Accessory SKU Listing..... 59-63

Panels, Fillers and Trim

- Panels, Fillers and Trim SKU Listing..... 64-74

SOHO Panels, Fillers and Trim..... 75-78

Essential Series

Ready to Build | Ready to Impress

The Essential Series focuses on delivering the essential features that fit most projects. Whether you are outfitting a kitchen, bathroom or other spaces in the home, this line provides frameless, functional, & stylish cabinets with minimal wait time.

Limited Lifetime Warranty

Adornus, LLC (“Adornus”) extends the following lifetime limited warranty (“Limited Warranty”) to the first residential purchaser (“Residential Purchaser”) of any cabinet sold by Adornus (each, a “Product”). This Limited Warranty is only applicable to Products sold to the first Residential Purchaser and used in the applications described below within the United States. Residential Purchaser may not assign or transfer this Limited Warranty. Under this Limited Warranty, a “Residential Purchaser” means any of the following:

- A person who purchases and installs the Product in a dwelling that is owned and used by that person as his/her primary or secondary home; or
- Any person or business such as a builder, contractor or developer that purchases and installs the Product in a newly constructed or remodeled dwelling that will be used by the initial owner/purchaser of that dwelling as a primary or secondary home. In such situation, this Limited Warranty may be assigned to the initial owner/purchaser who uses the dwelling as a primary or secondary home, but may not be transferred or assigned to subsequent owners of the dwelling.

Under this Limited Warranty, a primary or secondary home does not include rental property. This Limited Warranty does not apply to landlords, leasing companies, or other commercial purchasers. Subject to the exclusions and limitations set forth in this Limited Warranty, Adornus warrants to Residential Purchaser that each Product will be free from defects in material and workmanship, under normal use and maintenance, for the applicable warranty period stated below. This Limited Warranty gives Residential Purchaser specific legal rights, and Residential Purchaser may have other rights which vary from State to State. This Limited Warranty for Residential Purchasers begins on the date the Product was purchased, whether purchased by the Residential Purchaser or by a third party on Residential Purchaser’s behalf. This Limited Warranty is only valid if Residential Purchaser uses the dwelling as his/her primary or secondary home and does not extend to future owners if the property is sold.

THIS LIMITED WARRANTY IS ADORNUS’ SOLE AND EXCLUSIVE WARRANTY WITH RESPECT TO THE PRODUCTS. ALL IMPLIED WARRANTIES ARE STRICTLY LIMITED TO THE DURATION OF THE LIMITED WARRANTY APPLICABLE TO THE PRODUCT AS STATED HEREIN, INCLUDING BUT NOT LIMITED TO, ANY WARRANTY OF MERCHANTABILITY OR OF FITNESS FOR A PARTICULAR PURPOSE. IN NO EVENT SHALL ADORNUS BE LIABLE TO THE RESIDENTIAL PURCHASER OR ANY THIRD PARTY FOR INCIDENTAL OR CONSEQUENTIAL DAMAGES, INCLUDING, WITHOUT LIMITATION, DAMAGES ARISING FROM PERSONAL INJURY, LOST PROFITS, LOSS OF BUSINESS OPPORTUNITY, LOSS OF PROPERTY, ECONOMIC LOSSES, OR STATUTORY OR EXEMPLARY DAMAGES, WHETHER FROM NEGLIGENCE, WARRANTY, STRICT LIABILITY OR OTHERWISE.

Limited Lifetime Warranty

Exclusions

This Limited Warranty does not apply to any Product:

- Installed or used outdoors;
- Used for purposes for which it is not designed or intended by Adornus;
- That has been subjected to misuse, vandalism, abuse, negligence, accident, or unauthorized modifications;
- That has been improperly stored (if the Product must be stored, it should be covered and stored in a humidity and temperature-controlled environment, away from direct sunlight);
- That has been improperly installed, cleaned, or maintained (for more information regarding the proper use and care of the Product;
- That has been subjected to improper temperature, moisture and/or humidity extremes (temperature outside the range of 50-85ºf (10-29ºc) and humidity outside the range of 30-55% are considered extreme);
- Damaged by fire, flood, acts of God, or other external causes beyond adornus' control;
- Varying in color and characteristics due to age, sunlight, smoke, or other environmental conditions;
- Exhibiting any effects on the color and/or integrity of the finish or appearance due to the use of abrasive cleaners, cleaners that contain chlorine, acidic cleaners, scuffing sponges or steel wool; and/or
- Exhibiting normal wear and tear.

In addition, natural woods may vary in color and characteristics and exhibit subtle changes as they age. For example, painted doors, drawer fronts, and face frames may eventually have visible cracking around the joint area, and cabinet colors may darken or lighten over time. These variations are of the material in relation to their environmental exposure and are not covered under this Limited Warranty.

Sole and Exclusive Remedy

In the event of a defect in the workmanship or materials of a Product occurring during the Limited Warranty period described above, Adornus will, at its sole option, repair or replace any defective Product or Product component; provided, if it is not commercially feasible to repair or replace a defective Product or Product component, Adornus may refund the original price paid by Residential Purchaser for the defective Product or Product component, or provide a credit towards a similar type of product sold by Adornus. The foregoing, at Adornus' option, are the Residential Purchaser's sole and exclusive remedies for any Product defect or non-conformity.

Limited Lifetime Warranty

In addition, by way of example but not limitation, the following costs and expenses are not covered by this Limited Warranty: (1) labor costs for the original installation, removal, or reinstallation of the Product, or any defective part thereof; (2) labor costs or material charges for the removal, reinstallation, repainting, refinishing or replacement of any other items or building materials which must be removed, replaced, reinstalled, or refinished in order to repair or replace the defective Product or component. For example, costs associated with the following will not be reimbursed: counters, sinks, tiles, flooring, accessories, appliances or plumbing fixtures. When a claim for warpage, joint separation or wood growth is submitted, Adornus may, at its sole option and after inspection, defer action for up to twelve (12) months to allow the Product to acclimate to the installed environment. Further, Adornus reserves the right to modify or alter any Product design, specifications or materials without obligation to make similar changes to Products previously sold by Adornus. The repair or replacement remedies offered by Adornus under this Limited Warranty are contingent on the current Product offerings of styles and construction options within Adornus' Product line at the time a warranty claim is made by Residential Purchaser. If a valid warranty claim is filed for an obsolete Product, Adornus reserves the right, at its sole option, to honor its repair or replacement obligations under this Limited Warranty by either: (1) replacing the affected Product or component with a new Product or component of the same or approximate style or color from Adornus' current Product line or offerings; or (2) replacing the affected Product or component to achieve a uniform appearance with a similar or comparable product style or approximate color of the originally purchased Product style. If a Product or components are replaced or repaired, Adornus cannot guarantee an exact match with the finish or appearance of other products or fixtures installed at Residential Purchaser's dwelling. This is due to changes that may occur during the Products' natural aging process, which may affect its color and/or grain.

Limitation of Liability

Except as otherwise required by applicable law, the remedies described above are the Residential Purchaser's sole and exclusive remedies and Adornus' entire liability for any breach of this Limited Warranty. Adornus' total liability shall under no circumstances exceed the actual amount paid by Residential Purchaser for the defective Product.

All potential claims hereunder must be submitted to Adornus, in writing, and must specify the defects present in the Products and/or Product components.

Dealer Responsibilities

Dealer acknowledges and agrees that it is solely responsible for communicating all policies, product information, order details, installation instructions, delivery expectations, and claim procedures to its customers.

The company shall not communicate directly with the dealer's customers. The company shall not be liable for any inaccurate, incomplete, or misleading information provided by the Dealer or its representatives.

Order Placement

Orders may be submitted by dealer using the company's online portal, approved order forms, 2020 Design or ProKitchen SKU lists, or email through a designated customer service representative.

Dealer shall review and confirm all orders for accuracy, including but not limited to:

- Cabinet sizes and configurations
- Modifications and custom notes
- Finished ends and hinge directions
- Color, style, and material selections
- Quantities
- Shipping method

Once an order has been confirmed and approved by Dealer, Dealer assumes full responsibility for the accuracy and completeness of the order.

Changes, Cancellations, and Restocking Fees

Semi-custom, assembled, and modified orders shall not be changed, canceled, or returned after submission to production.

Stock (RTA) orders may be changed prior to release to the warehouse for fulfillment.

Orders that have been shipped or palletized shall incur a twenty-five percent (25%) restocking fee and the Dealer shall be responsible for return freight costs, if applicable.

Non-returnable items include:

- Semi-custom (made to order) cabinets
- Modified cabinets
- Assembled cabinets
- RTA cabinets assembled by the Dealer or end customer
- Special-order or custom-size cabinets

Delivery and Pick Up

Dealer may select from the following delivery options:

(a) Pick up at an Adornus warehouse;
(b) Company truck curbside delivery;
(c) White-glove delivery for an additional fee;
(d) Common carrier scheduled curbside delivery by company;
(e) Common carrier scheduled by dealer.

Rescheduled deliveries may incur a rescheduling fee.

Inspection and Claims

Dealer or its designated representative shall inspect all shipments immediately upon receipt.

Dealer shall verify and sign for both piece count and pallet count.

Claims for unconcealed damages or shortages must be noted on the bill of lading at the time of delivery and reported to the Adornus immediately. Claims without proper documentation may be rejected.

Claims for concealed damage must be reported within 7 business days of delivery via email to customerservice@adornus.com, including photos, order number, item numbers, and detailed description.

Claims for concealed damages must be reported prior to installation via email to customerservice@adornus.com, including photos, order number, item numbers, and detailed description.

Product Warranty

Please refer to the Adornus official product warranty policy form.

Dealer Conduct and Compliance

Dealer agrees to:

- Provide accurate information to customers
- Represent Adornus products professionally
- Maintain all account terms in good standing
- Adhere to all policies and procedures outlined in this agreement

Non-compliance may result in suspension or termination of Dealer privileges.

Door Style Options (Paint Finish)

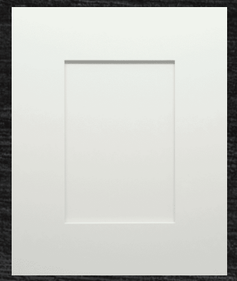

Hampton



Fresno



Vail



Providence

Natural Stain



Artesia



Belmont

White Oak

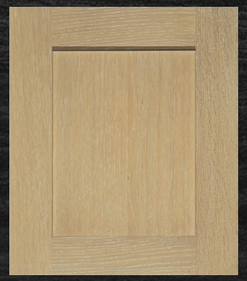

Chelsea



Empire

Color-Up

20 Stunning Colors to Select!

The Color-up program opens up more options for all door styles allowing further personalization. Subtle or bold, Color-up can ensure the perfect look for any space.

High Reflective White	Pure White (standard)	Alabaster	Accessible Beige
Antique White	Perfect Greige	Mindful Gray	Light French Gray
Web Gray	Cyberspace	Quietude	Sea Salt
Succulent	Roycroft Green	Urban Bronze	Iron Ore
Bracing Blue	Galeforce	Naval	Tricorn Black

Color-Up Details

- Color-up program is available on painted doors for an upcharge.
- Color-up orders less than five cabinets will be subject to additional $500 up charge.

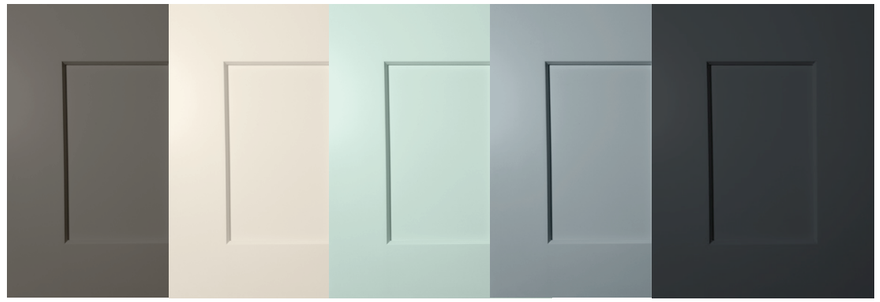

Door Style Option

Modern & Professional

Frameless euro modern cabinetry brings a clean, architectural look to any space. The design emphasizes precise lines, smooth surfaces, and balanced proportions. Its frameless construction allows for maximum storage and a seamless façade. A curated palette of 8 gloss & super matte options provides a sleek modern finish. An additional 15 textured finishes offer depth, warmth, and tactile appeal. Perfect for projects requiring contemporary sophistication with lasting durability.

Soho



Door Style: Soho
Finishes: Noir + Tortora Super Matte

SOHO Door Style Options

Gloss & Super Matte

- Black High Gloss
- Cashmere High Gloss
- Sunny White High Gloss
- Tortora High Gloss
- Tortora Matte
- Black Matte
- Cashmere Matte
- Sunny White Matte

Textured Finishes

- Bruno
- Canella
- Espresso
- Fad
- Flaxen
- Ice
- Lofty
- Marigold
- Noir
- Pebble
- Realm
- Rift
- Sunset
- Uva
- Walnut

ESSENTIAL SERIES

Sleek, Open Interiors, and Seamless Finishes

Elevating the Essentials

The Essential Series focuses on delivering the essential features that fit most projects. Whether you're outfitting a kitchen, laundry room, or office, this line provides frameless, functional, and stylish cabinets with minimal wait time.

Ready and Delivered Fast

- Ideal for projects that require speed and reliability.
- Color-up available on painted finishes



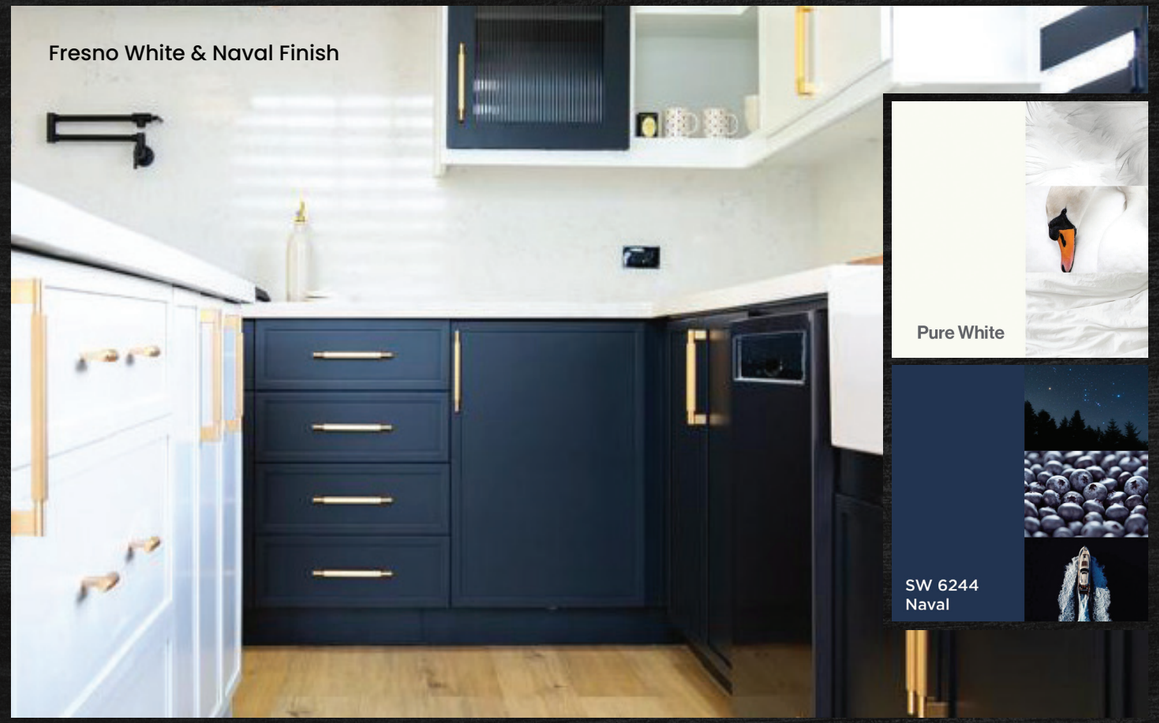





Hampton

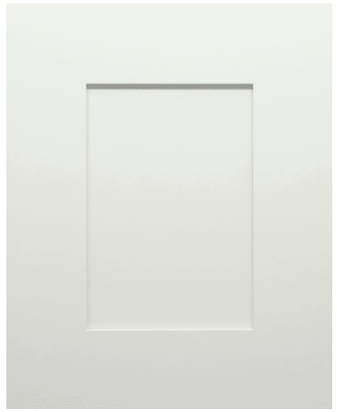



Fresno



Vail



Providence

Box Construction

Frameless Cabinet Construction

The Essential Series focuses on delivering the essential features that fit most projects. Whether you're outfitting a kitchen, closet, laundry room, or office, this line provides stylish cabinets with minimal wait time.

For a truly seamless and streamlined design, the frameless box is the best choice. This design focuses on a clean, uninterrupted aesthetic with no visible borders, offering a sleek and spacious feel. The frameless structure maximizes interior access, making it ideal for modern settings and spaces.



1 Frameless full access cabinet construction

2 Natural UV finished interior

3 Solid wood door / drawer stiles & rails

4 MDF center panels

5 Dovetail 5/8" hardwood drawer boxes

6 Soft close under-mounted drawer slides

7 6-way adjustable concealed soft close hinges

8 Matching edgeband

9 Matching cabinet exterior

10 For color-up you must select optional matching ends and bottom soho (modern) doors require applied panels for exposed ends and bottoms

Door Sizing

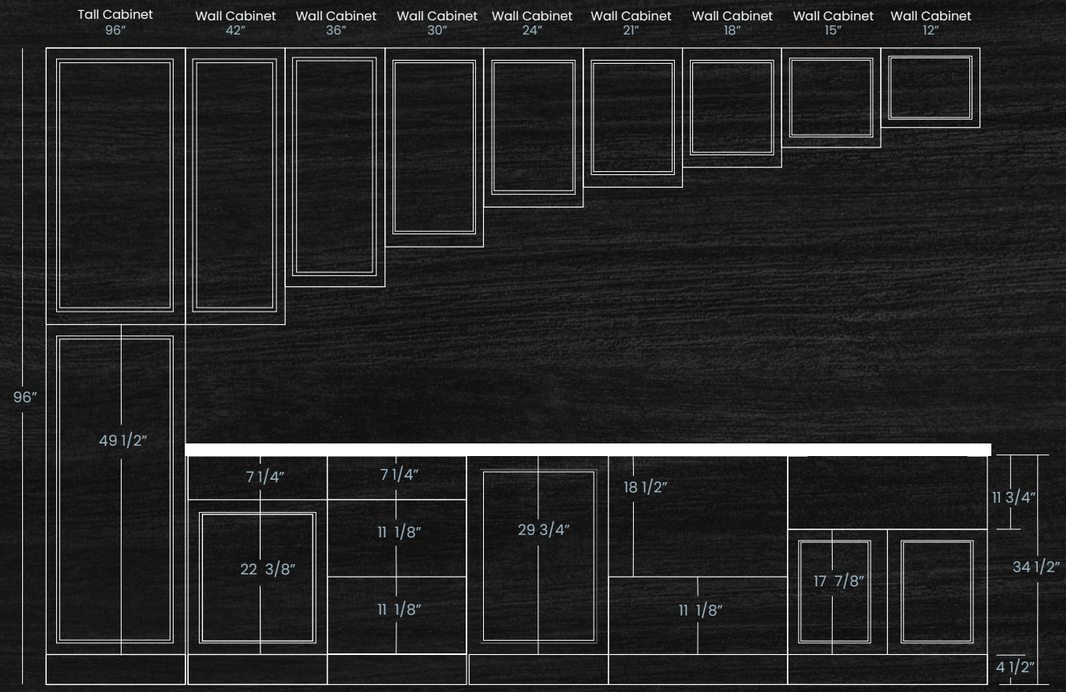

Reveals

Wall Cabinets

1/16" on left & right | 1/8" on top & bottom

Base and Vanity Cabinets

- 1/16" on left and right side
- 1/4" on top, no reveal on bottom
- 1/8" between doors and drawer fronts

Tall Cabinets

- 1/16" on left and right side
- 1/8" on top, no reveal on bottom
- 1/8" between top and bottom doors

Alignment

Utility Tall 84"

Top door lines up with 30" Wall Cabinet

Utility Tall 90"

Top door lines up with 36" Wall Cabinet

Utility Tall 96"

Top door lines up with 42" Wall Cabinet

Full Access Cabinet Specifications

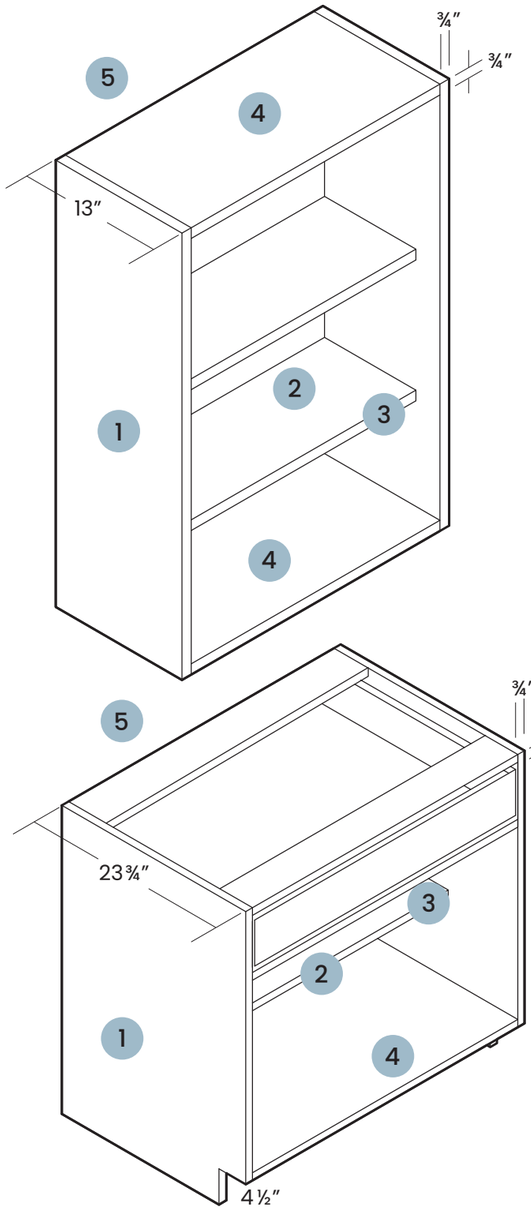

1. 3/4″ Sides
2. 3/4″ Adjustable Shelves
3. 11" Depth
4. 3/4″ Top and Bottom
5. 3/8″ Plywood Back with 3/4″ Top and Bottom Nailers

1. 3/4″ Sides
2. 3/4″ Adjustable Shelves
3. 15" Depth
4. 3/4″ Bottom
5. 3/8″ Plywood Back with 3/4″ Top and Bottom Nailers

Full Access Tall, Wall and Base Cabinet Specifications

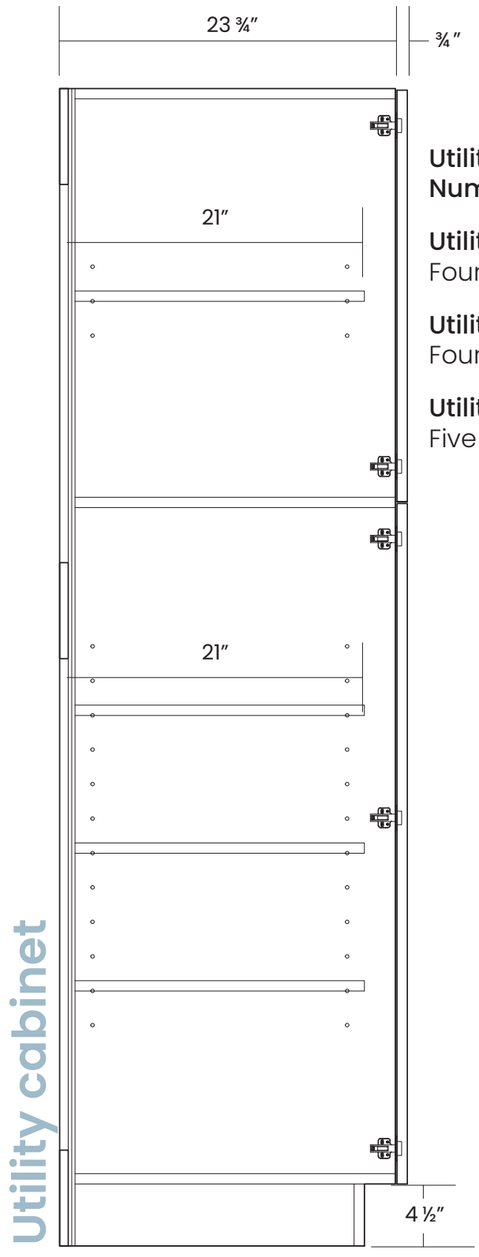

Utility Cabinet Number of Shelves:

Utility 84″
Four Shelves

Utility 90″
Four Shelves

Utility 96″
Five Shelves

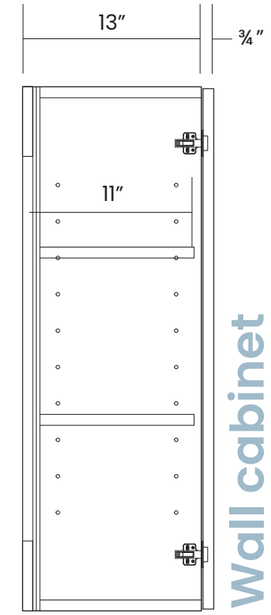

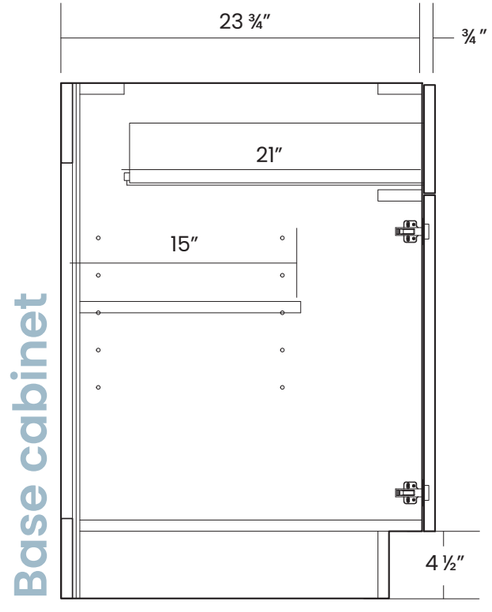

Full Access Oven Cabinet Specifications

Top doors change based on oven height. All drawers are 7 ¼” choose 1, 2, or 3 Drawers.

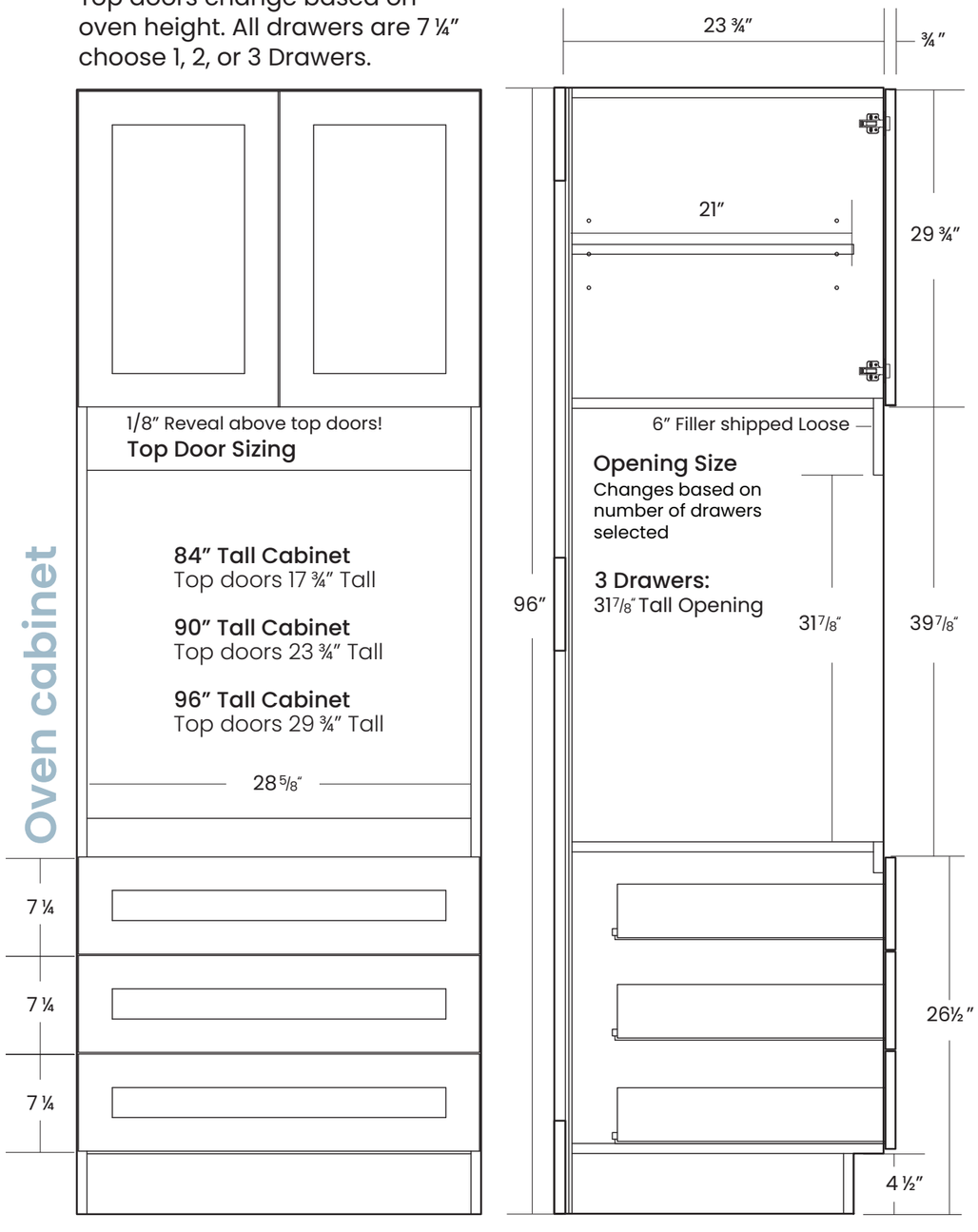

Full Access Oven Cabinet Specifications

Consider the height of any appliances before selecting the number of drawers for oven cabinets.

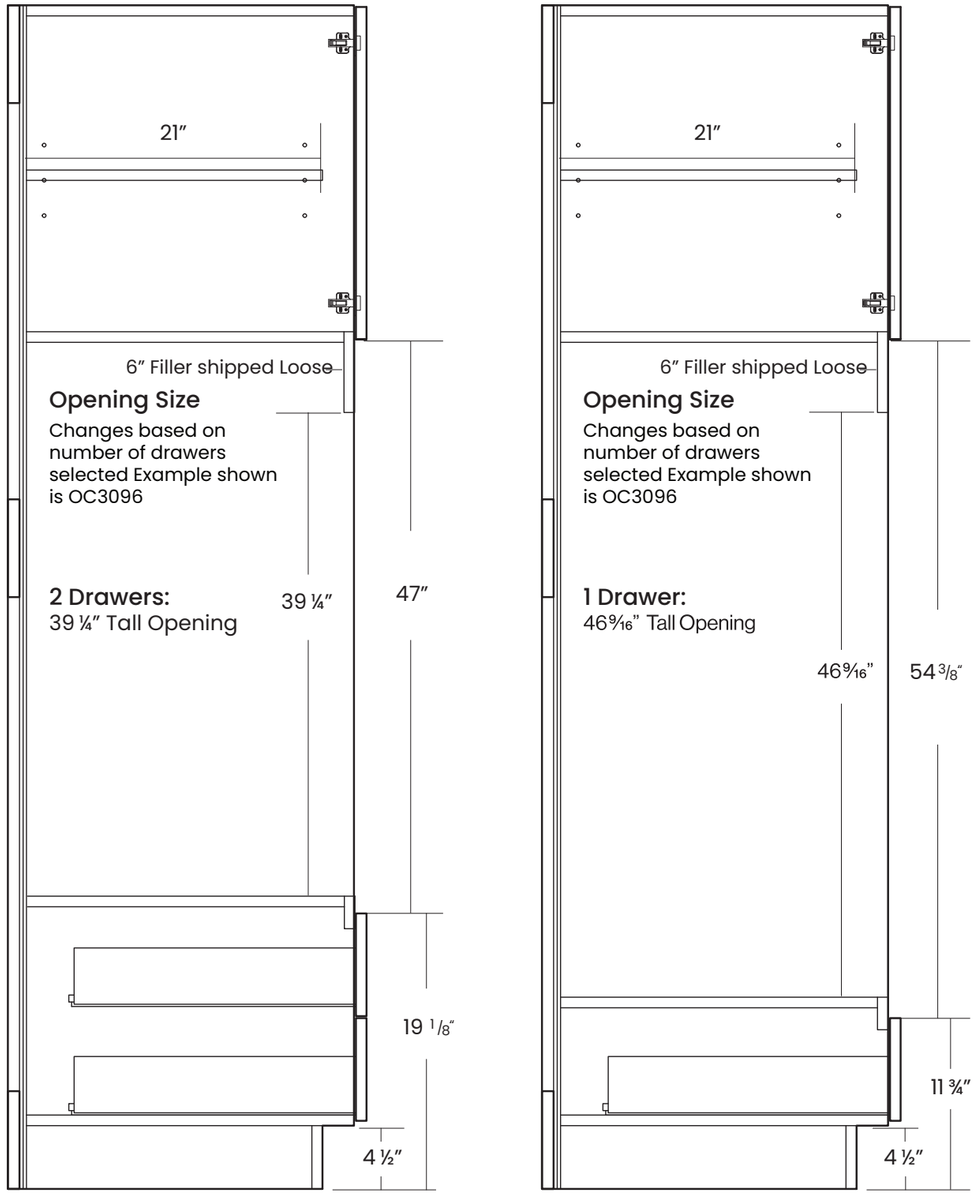

Full Access Blind Corner Cabinet Specifications

Wall blind corner

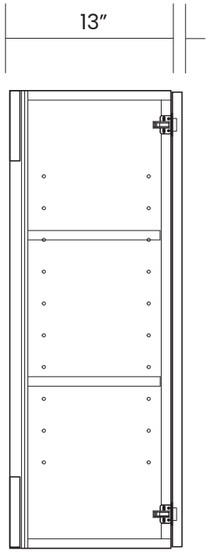

*NO PULL REQUIRED

Shown blind right

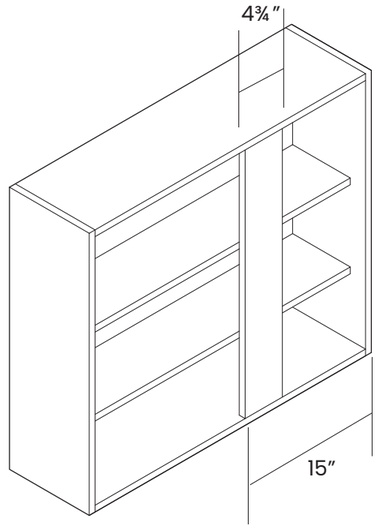

Base blind corner

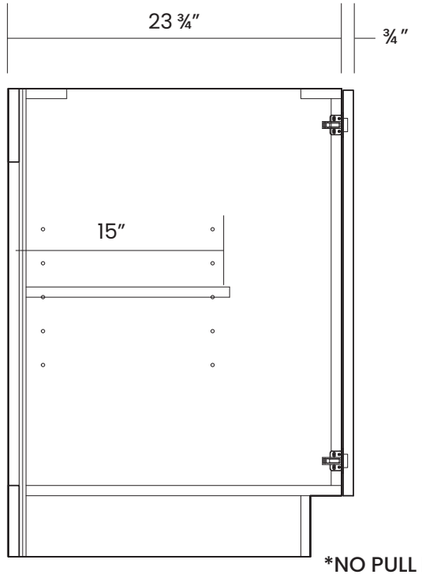

*NO PULL REQUIRED

Shown blind left

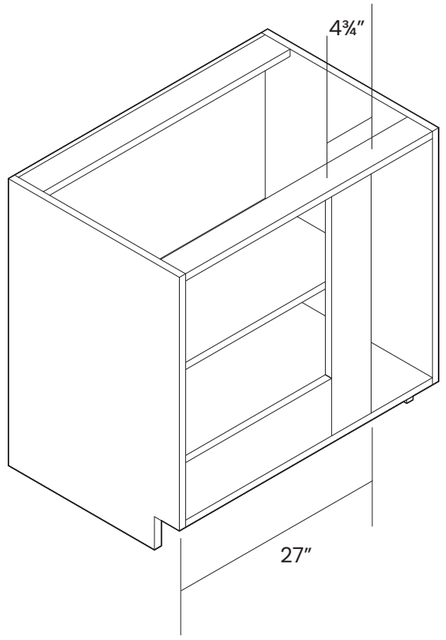

HINGE SIDE DETERMINES BLIND SIDE (BLIND LEFT = HINGE LEFT)

Full Access Angle Cabinet Specifications

Wall angle cabinet 24″

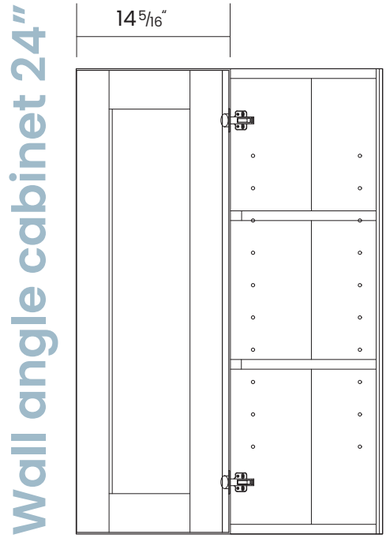

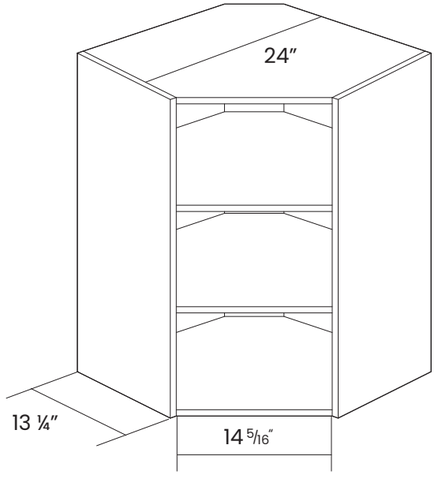

PROPER ANGLE WALL CABINET POSITIONING

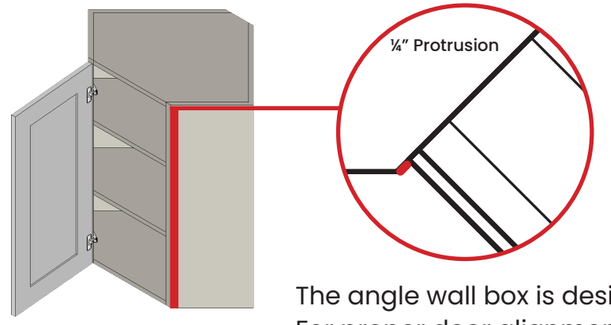

The angle wall box is designed to protrude 1/4″
For proper door alignment to adjacent cabinets



WALL CABINETS

Wall Cabinets Introduction



Wall Cabinets

Efficiently utilize vertical space and keep your counter tops clear from clutter without the loss of luxury and refinement.

Cabinet Code Example

A wall cabinet that is 18” wide by 42” tall.

Code	Width	Height	Depth
W1842	18	42	13

SKU code is **W1842.**

Designer/Owner Recommendations

Consider the placement of wall cabinets to maximize functionality and aesthetics. Position them at a comfortable height for easy access and ensure they are evenly spaced for a balanced look.

Regularly clean and maintain your wall cabinets to ensure they remain in optimal condition. Use a gentle cleaning solution and soft cloth to remove dust and debris, and avoid harsh chemicals or abrasive materials that could damage the finish,

Installation Notes

Ensure that your wall cabinets are level and installed securely. Use appropriate hardware and mounting techniques to prevent sagging or shifting over time.

Utilize interior accessories such as adjustable shelves to optimize storage space and organization within the cabinets. This will help make the most of the available space and keep all items neatly organized.

Wall Cabinets



Wall Cabinet 42" High Single Door

Code	Description	Width	Height	Depth	Price
W0642	Single Door 3 Adjustable Shelves	6	42	13	$413
W0942	Single Door 3 Adjustable Shelves	9	42	13	$418
W1242	Single Door 3 Adjustable Shelves	12	42	13	$429
W1542	Single Door 3 Adjustable Shelves	15	42	13	$480
W1842	Single Door 3 Adjustable Shelves	18	42	13	$586
W2142	Single Door 3 Adjustable Shelves	21	42	13	$657



Wall Cabinet 42" High Double Door

Code	Description	Width	Height	Depth	Price
W2442	Double Door 3 Adjustable Shelves	24	42	13	$776
W2742	Double Door 3 Adjustable Shelves	27	42	13	$801
W3042	Double Door 3 Adjustable Shelves	30	42	13	$890
W3342	Double Door 3 Adjustable Shelves	33	42	13	$914
W3642	Double Door 3 Adjustable Shelves	36	42	13	$926

Wall Cabinets



Wall Cabinet 36" High Single Door

Code	Description	Width	Height	Depth	Price
W0636	Single Door 2 Adjustable Shelves	6	36	13	$358
W0936	Single Door 2 Adjustable Shelves	9	36	13	$387
W1236	Single Door 2 Adjustable Shelves	12	36	13	$400
W1536	Single Door 2 Adjustable Shelves	15	36	13	$408
W1836	Single Door 2 Adjustable Shelves	18	36	13	$492
W2136	Single Door 2 Adjustable Shelves	21	36	13	$563



Wall Cabinet 36" High Double Door

Code	Description	Width	Height	Depth	Price
W2436-2	Double Door 2 Adjustable Shelves	24	36	13	$643
W2736	Double Door 2 Adjustable Shelves	27	36	13	$662
W3036	Double Door 2 Adjustable Shelves	30	36	13	$759
W3336	Double Door 2 Adjustable Shelves	33	36	13	$818
W3636	Double Door 2 Adjustable Shelves	36	36	13	$876

Wall Cabinets



Wall Cabinet 30" High Single Door

Code	Description	Width	Height	Depth	Price
W0630	Single Door 2 Adjustable Shelves	6	30	13	$303
W0930	Single Door 2 Adjustable Shelves	9	30	13	$311
W1230	Single Door 2 Adjustable Shelves	12	30	13	$333
W1530	Single Door 2 Adjustable Shelves	15	30	13	$398
W1830	Single Door 2 Adjustable Shelves	18	30	13	$411
W2130	Single Door 2 Adjustable Shelves	21	30	13	$477



Wall Cabinet 30" High Double Door

Code	Description	Width	Height	Depth	Price
W2430-2	Double Door 2 Adjustable Shelves	24	30	13	$534
W2730	Double Door 2 Adjustable Shelves	27	30	13	$587
W3030	Double Door 2 Adjustable Shelves	30	30	13	$665
W3330	Double Door 2 Adjustable Shelves	33	30	13	$683
W3630	Double Door 2 Adjustable Shelves	36	30	13	$707

Wall Cabinets



Wall Cabinet 24" High Double Door

Code	Description	Width	Height	Depth	Price
W3024	Double Door 1 Adjustable Shelf	30	24	13	$539
W3624	Double Door 1 Adjustable Shelf	36	24	13	$621



Wall Cabinet 21” and 18" High Double Door

Code	Description	Width	Height	Depth	Price
W2418	Double Door No Shelf	24	18	13	$363
W2718	Double Door No Shelf	27	18	13	$396
W3018	Double Door No Shelf	30	18	13	$440
W3318	Double Door No Shelf	33	18	13	$468
W3618	Double Door No Shelf	36	18	13	$479
W3021	Double Door No Shelf	30	21	13	$451

Wall Cabinets



Wall Cabinet 15" High Double Door

Code	Description	Width	Height	Depth	Price
W3015	Double Door No Shelf	30	15	13	$417
W3615	Double Door No Shelf	36	15	13	$426



Wall Cabinet 12" High Double Door

Code	Description	Width	Height	Depth	Price
W2412	Double Door No Shelf	24	12	13	$276
W2712	Double Double Door No Shelf	27	12	13	$305
W3012	Double Door No Shelf	30	12	13	$359
W3312	Double Door No Shelf	33	12	13	$351
W3612	Double Door No Shelf	36	12	13	$387

Wall Cabinets



Wall Cabinet 12" and 18" High Single Door

Code	Description	Width	Height	Depth	Price
W2112	Single Door No Shelf	21	12	23.75	$243
W2118	Single Door No Shelf	21	18	23.75	$299



Refrigerator Wall Cabinet Double Door

Code	Description	Width	Height	Depth	Price
RW301224	Double Door No Shelf	30	12	23.75	$387
RW331224	Double Door No Shelf	33	12	23.75	$372
RW361224	Double Door No Shelf	36	12	23.75	$517



Refrigerator Wall Double Door

Code	Description	Width	Height	Depth	Price
RW301824	Double Door No Shelf	30	18	23.75	$499
RW331824	Double Door No Shelf	33	18	23.75	$498
RW361824	Double Door No Shelf	36	18	23.75	$576

Wall Cabinets



Refrigerator Wall Double Door

Code	Description	Width	Height	Depth	Price
RW302424	Double Door 1 Adjustable Shelf	30	24	23.75	$625
RW332424	Double Door 1 Adjustable Shelf	33	24	23.75	$628
RW362424	Double Door 1 Adjustable Shelf	36	24	23.75	$1,319



Wall Easy Reach Cabinet

Code	Description	Width	Height	Depth	Price
WEZR2442	Bi-Fold Door 9 15/16" Wide Doors 3 Shelves	24	42	13	$874
WEZR2436	Bi-Fold Door 9 15/16" Wide Doors 2 Shelves	24	36	13	$838
WEZR2430	Bi-Fold Door 9 15/16" Wide Doors 2 Shelves	24	30	13	$802
WEZR2418	Bi-Fold Door 9 15/16" Wide Doors No Shelves	24	18	13	$737
WEZR2412	Bi-Fold Door 9 15/16" Wide Doors No Shelves	24	12	13	$708

Wall Cabinets



Wall Blind Corner

Code	Description	Width	Height	Depth	Price
WBC3042	Single Door 3 Shelves 14 7/8" Wide Doors	30	42	13	$721
WBC3342	Single Door 3 Shelves 17 7/8" Wide Doors	33	42	13	$772
WBC3036	Single Door 2 Shelves 14 7/8" Wide Doors	30	36	13	$685
WBC3336	Single Door 2 Shelves 17 7/8" Wide Doors	33	36	13	$737
WBC3030	Single Door 2 Shelves 14 7/8" Wide Doors	30	30	13	$648
WBC3330	Single Door 2 Shelves 17 7/8" Wide Doors	33	30	13	$687

Wall Cabinets



Angle Wall Cabinet

Code	Description	Width	Height	Depth	Price
AWC2442	Single Door 3 Shelves 14 5/16" Wide Door	24	42	13	$929
AWC2436	Single Door 2 Shelves 14 5/16" Wide Door	24	36	13	$854
AWC2430	Single Door 2 Shelves 14 5/16" Wide Door	24	30	13	$760
AWC2418	Single Door No Shelf 14 5/16" Wide Door	24	18	13	$479
AWC2412	Single Door No Shelf 14 5/16" Wide Door	24	12	13	$319

Box is designed to protrude 1/4" for door alignment to adjacent cabinets.

Wall Cabinets



Glass Door Wall Cabinet 42" High Single Door

Code	Description	Width	Height	Depth	Price
GDW1242	Single Door 3 Adjustable Shelves	12	42	13	$471
GDW1542	Single Door 3 Adjustable Shelves	15	42	13	$528
GDW1842	Single Door 3 Adjustable Shelves	18	42	13	$628

Finished Interior Clear Glass



Glass Door Wall Cabinet 42" High Double Door

Code	Description	Width	Height	Depth	Price
GDW2442	Double Door 3 Adjustable Shelves	24	42	13	$835
GDW3042	Double Door 3 Adjustable Shelves	30	42	13	$974
GDW3642	Double Door 3 Adjustable Shelves	36	42	13	$1,256

Finished Interior Clear Glass



Glass Door Wall Cabinet 36" High Single Door

Code	Description	Width	Height	Depth	Price
GDW1236	Single Door 2 Adjustable Shelves Finished Interior Clear Glass	12	36	13	$439
GDW1536	Single Door 2 Adjustable Shelves Finished Interior Clear Glass	15	36	13	$449
GDW1836	Single Door 2 Adjustable Shelves Finished Interior Clear Glass	18	36	13	$554

Finished Interior Clear Glass



Glass Door Wall Cabinet 36" High Double Door

Code	Description	Width	Height	Depth	Price
GDW2436	Double Door 2 Adjustable Shelves Finished Interior Clear Glass	24	36	13	$736
GDW3036	Double Door 2 Adjustable Shelves Finished Interior Clear Glass	30	36	13	$919
GDW3636	Double Door 2 Adjustable Shelves Finished Interior Clear Glass	36	36	13	$1,107

Finished Interior Clear Glass



Glass Door Wall Cabinet 30" High Single Door

Code	Description	Width	Height	Depth	Price
GDW1230	Single Door 2 Adjustable Shelves Finished Interior Clear Glass	12	30	13	$366
GDW1530	Single Door 2 Adjustable Shelves Finished Interior Clear Glass	15	30	13	$438
GDW1830	Single Door 2 Adjustable Shelves Finished Interior Clear Glass	18	30	13	$448

Finished Interior Clear Glass



Glass Door Wall Cabinet 30" High Double Door

Code	Description	Width	Height	Depth	Price
GDW2430	Double Door 2 Adjustable Shelves	24	30	13	$664
GDW3030	Double Door 2 Adjustable Shelves	30	30	13	$743
GDW3630	Double Door 2 Adjustable Shelves	36	30	13	$895
	Finished Interior Clear Glass				



Glass Door Angle Wall Cabinet

Code	Description	Width	Height	Depth	Price
GDAWC2442	Single Door 3 Shelves 14 5/16" Wide Door Finished Interior Clear Glass	24	42	13	$975
GDAWC2436	Single Door 2 Shelves 14 5/16" Wide Door Finished Interior Clear Glass	24	36	13	$897
GDAWC2430	Single Door 2 Shelves 14 5/16" Wide Door Finished Interior Clear Glass	24	30	13	$797
GDAWC2418	Single Door No Shelf 14 5/16" Wide Door Finished Interior Clear Glass	24	18	13	$526
GDAWC2412	Single Door No Shelf 14 5/16" Wide Door Finished Interior Clear Glass	24	12	13	$351
	Finished Interior Clear Glass Box is designed to protrude 1/4" for door alignment to adjacent cabinets.				



BASE CABINETS

Base Cabinets Introduction



Base Cabinets

Choose from a wide range of base cabinets to suit your individual tastes and preferences.

Cabinet Code Example

A base cabinet 21” wide

Code	Width	Height	Depth
B21	21	34.5	23.75

SKU code is **B21.**

Note that the standard height of a base cabinet is 34.5" and the standard depth is 23.75".

Designer/Owner Recommendations

Measure the space carefully and choose base cabinets that fit seamlessly into the layout. Consider the dimensions of the room, as well as any appliances or fixtures that the cabinets will need to accommodate.

Regularly clean and maintain your base cabinets to ensure they remain in optimal condition. Use a gentle cleaning solution and soft cloth to remove dust and debris, and avoid harsh chemicals or abrasive materials that could damage the finish,

Installation Notes

Before installation carefully inspect the construction of all cabinets. If a cabinet has a critical flaw be sure to set it aside and contact us for claim damage. Pictures will be requested of any cabinets with defects or faults and must be submitted before a claim can be filed into production.

Perform a final inspection to ensure that all base cabinets are installed properly for stability and functionality. Use appropriate mounting hardware for installation to prevent sagging or shifting over time.

Base Cabinets



Base Cabinet - Single Door & Drawer

Code	Description	Width	Height	Depth	Price
B12	Single Door 1 Adjustable Shelf	12	34.5	23.75	$681
B15	Single Door 1 Adjustable Shelf	15	34.5	23.75	$718
B18	Single Door 1 Adjustable Shelf	18	34.5	23.75	$754
B21	Single Door 1 Adjustable Shelf	21	34.5	23.75	$791



Base Cabinet - Double Door & Drawer

Code	Description	Width	Height	Depth	Price
B24	Double Door 1 Adjustable Shelf	24	34.5	23.75	$827
B27	Double Door 1 Adjustable Shelf	27	34.5	23.75	$864
B30	Double Door 1 Adjustable Shelf	30	34.5	23.75	$900
B33	Double Door 1 Adjustable Shelf	33	34.5	23.75	$936
B36	Double Door 1 Adjustable Shelf	36	34.5	23.75	$973

Base Cabinets



Base Cabinet - Single Full Height Door

Code	Description	Width	Height	Depth	Price
FHB06	Single Full Height Door 1 Adjustable Shelf	6	34.5	23.75	$390
FHB09	Single Full Height Door 1 Adjustable Shelf	9	34.5	23.75	$470
FHB12	Single Full Height Door 1 Adjustable Shelf	12	34.5	23.75	$490
FHB15	Single Full Height Door 1 Adjustable Shelf	15	34.5	23.75	$510
FHB18	Single Full Height Door 1 Adjustable Shelf	18	34.5	23.75	$551
BFHD21	Single Full Height Door 1 Adjustable Shelf	21	34.5	23.75	$574

Box will Use Standard Base Cabinet box and will have stretcher holes



Base Cabinet - Double Full Height Door

Code	Description	Width	Height	Depth	Price
BFHD24	Double Full Height Door 1 Adjustable Shelf	24	34.5	23.75	$585
BFHD27	Double Full Height Door 1 Adjustable Shelf	27	34.5	23.75	$626
BFHD30	Double Full Height Door 1 Adjustable Shelf	30	34.5	23.75	$649
BFHD33	Double Full Height Door 1 Adjustable Shelf	33	34.5	23.75	$682
BFHD36	Double Full Height Door 1 Adjustable Shelf	36	34.5	23.75	$713

Box will Use Standard Base Cabinet box and will have stretcher holes

Base Cabinets



Sink Base Cabinet - Double Door W/False Front

Code	Description	Width	Height	Depth	Price
SB24	Double Door No Shelf	24	34.5	23.75	$667
SB27	Double Door No Shelf	27	34.5	23.75	$696
SB30	Double Door No Shelf	30	34.5	23.75	$783
SB33	Double Door No Shelf	33	34.5	23.75	$820
SB36	Double Door No Shelf	36	34.5	23.75	$856



Farm Sink Base

Code	Description	Width	Height	Depth	Price
FSB36	Double Door No Shelf	36	34.5	23.75	$656

Adornus Will Not Pre-cut Frame at the Factory. Frames Must Be Cut on Site by the Hired Contractor / Installer.

Base Cabinets



Angle Base Cabinet

Code	Description	Width	Height	Depth	Price
BEA12	Single Door 2 Adjustable Shelves	12	34.5	23.75	$508

Shown as Right Side. Specify L or R hinge/finished side when ordering.

If the finished side is factory-applied rather than field-reversible, consider separate BEA12L / BEA12R SKUs instead.



Angle Sink Base - Adjustable Shelf

Code	Description	Width	Height	Depth	Price
ASB36	36" Single Door 1 Adjustable Shelf	36	34.5	23.75	$929
ASB42	42" Double Door 1 Adjustable Shelf	42	34.5	23.75	$1,064

Base Cabinets



Base Cabinet - Three Drawer

Code	Description	Width	Height	Depth	Price
DB12-3	3 Drawer	12	34.5	23.75	$984
DB15-3	3 Drawer	15	34.5	23.75	$1,038
DB18-3	3 Drawer	18	34.5	23.75	$1,111
DB21-3	3 Drawer	21	34.5	23.75	$1,184
DB24-3	3 Drawer	24	34.5	23.75	$1,275
DB27-3	3 Drawer	27	34.5	23.75	$1,348
DB30-3	3 Drawer	30	34.5	23.75	$1,402
DB33-3	3 Drawer	33	34.5	23.75	$1,457
DB36-3	3 Drawer	36	34.5	23.75	$1,530



Base Cabinet - Two Drawer

Code	Description	Width	Height	Depth	Price
DB24-2	2 Drawer	24	34.5	23.75	$1,054
DB30-2	2 Drawer	30	34.5	23.75	$1,169
DB36-2	2 Drawer	36	34.5	23.75	$1,275

Base Cabinets



Base Blind Corner

Code	Description	Width	Height	Depth	Price
BCB42	Single Door 1 Adjustable Shelf	42	34.5	23.75	$862
BCB45	Single Door 1 Adjustable Shelf	45	34.5	23.75	$917

Door sizes are 14 7/8" and 17 7/8" Respectively



Oven Base Cabinet

Code	Description	Width	Height	Depth	Price
BOC30	Oven Base Cabinet	30	34.5	23.75	$501

Adornus will not pre-cut frame at the factory. Frames must be cut on site by the hired contractor / installer.

Base Cabinets



Microwave Base Cabinet

Code	Description	Width	Height	Depth	Price
MWB24	Microwave Base Cabinet	24	34.5	23.75	$761
MWB30	Microwave Base Cabinet	30	34.5	23.75	$929

Adornus will not pre-cut frame at the factory. Frames must be cut on site by the hired contractor / installer.



Base Easy Reach - Adjustable Shelf

Code	Description	Width	Height	Depth	Price
ALS33	Bi-Fold Door 1 Adjustable Shelf	33	34.5	23.75	$802
ALS36	Bi-Fold Door 1 Adjustable Shelf	36	34.5	23.75	$922

Lazy Susan inserts sold separately. Items can be found on pages 60 and 61.

Base Cabinets



Base Open End Cabinet

Code	Description	Width	Height	Depth	Price
BEC9	2 Fixed Shelves Finished Interior	9	34.5	23.75	$427



Base Wine Rack

Code	Description	Width	Height	Depth	Price
BWR6	Base Wine Rack Finished Interior	6	34.5	23.75	$400

Tall Cabinets



Utility Cabinet - Single Door

Code	Description	Width	Height	Depth	Price
UC1884	Single Door 4 Adjustable Shelves	18	84	23.75	$1,139
UC1890	Single Door 4 Adjustable Shelves	18	90	23.75	$1,549
UC1896	Single Door Adjustable 5 Shelves	18	96	23.75	$1,689



Utility Cabinet - Double Door

Code	Description	Width	Height	Depth	Price
UC2484	Double Door 4 Adjustable Shelves	24	84	23.75	$1,827
UC2490	Double Door 4 Adjustable Shelves	24	90	23.75	$1,921
UC2496	Double Door 5 Adjustable Shelves	24	96	23.75	$2,064

Tall Cabinets



Utility Cabinet - Double Door

Code	Description	Width	Height	Depth	Price
UC3084	Double Door 4 Adjustable Shelves	30	84	23.75	$1,974
UC3090	Double Door 4 Adjustable Shelves	30	90	23.75	$2,074
UC3096	Double Door 5 Adjustable Shelves	30	96	23.75	$2,362



Oven Cabinet With Drawers

Code	Description	Width	Height	Depth	Price
OC3096	1-3 Drawers	30	96	23.75	$2,519
OC3090	1-3 Drawers	30	90	23.75	$2,193
OC3084	1-3 Drawers	30	84	23.75	$2,121

Adornus will not pre-cut frame at the factory. Frames must be cut on site by the hired contractor / installer.

Vertical and horizontal fillers should be ordered additionally to create proper fit of oven on site.



Vanity Cabinets Introduction



Vanity Cabinets

Choose from a wide range of vanity cabinets and customize smaller spaces.

Cabinet Code Example

A vanity sink base cabinet at 30" wide by 34 1/2" tall and 21" deep

Code	Width	Height	Depth
VSB30	30	34.5	21

SKU code is **VSB30**

Note that the standard height of a vanity cabinet is 34.5" and the standard depth is 21".

Designer/Owner Recommendations

Ensure that any selection or combination of vanity cabinets are properly sized to fit within the install space while also accommodating plumbing fixtures. Adornus will not alter these cabinets for plumbing fixtures and any modifications for plumbing will need to be done on site via the installer / contractor.

Installation Notes

Before installation carefully inspect the construction of all cabinets. If a cabinet has a critical flaw be sure to set it aside and contact us for claim damage. Pictures will be requested of any cabinets with defects or faults and must be submitted before a claim can be filed into production.

Vanity Cabinets



Vanity Base Cabinet - Single Door & Drawer

Code	Description	Width	Height	Depth	Price
VB12	Single Door 1 Adjustable Shelf 1 Drawer	12	34.5	21	$596
VB15	Single Door 1 Adjustable Shelf 1 Drawer	15	34.5	21	$662
VB18	Single Door 1 Adjustable Shelf 1 Drawer	18	34.5	21	$729

Vanity Sink Base Cabinet - Double Door

Code	Description	Width	Height	Depth	Price
VSB24-2	Double Door No Shelf	24	34.5	21	$620
VSB30	Double Door No Shelf	30	34.5	21	$724
VSB36	Double Door No Shelf	36	34.5	21	$821

Vanity Cabinets



Vanity Base Cabinet - Three Drawer

Code	Description	Width	Height	Depth	Price
VDB12-3	3 Drawer	12	34.5	21	$896
VDB15-3	3 Drawer	15	34.5	21	$988
VDB18-3	3 Drawer	18	34.5	21	$1,081



Vanity Knee Drawer

Code	Description	Width	Height	Depth	Price
VKD24	1 Drawer	24	7	21	$357
VKD30	1 Drawer	30	7	21	$394



ACCESSORIES

Accessories Introduction



Accessories, panels and Mouldings

Choose from a wide range of vanity cabinets and customize smaller spaces.

SKU Code

Accessories item SKUs will differ greatly depending on the type of item. It is important to review all measurements or notes per item ordered to ensure you are getting the correct item based on job needs.

Designer/Owner Recommendations

It’s better to order extra than the exact amount in most cases as mistakes or adjustments will likely happen during the install. Ordering slightly more than projected will help to prevent delays with job completion. Adornus recommends ordering extra mouldings, fillers, or toe kicks.

Installation Notes

Before installation carefully inspect all accessory items. If an item has a critical flaw be sure to set it aside and contact us for claim damage. Pictures will be requested of any items with defects or faults and must be submitted before a claim can be filed into production.



Pull Out Tray

Code	Description	Width	Height	Depth	Price
PO15	Pull Out Tray 15"	14 1/2	4	21	$340
PO18	Pull Out Tray 18"	17 1/2	4	21	$368
PO21	Pull Out Tray 21"	20 1/2	4	21	$417
PO24	Pull Out Tray 24"	23 1/2	4	21	$437
PO27	Pull Out Tray 27"	26 1/2	4	21	$459
PO30	Pull Out Tray 30"	29 1/2	4	21	$515
PO33	Pull Out Tray 33"	32 1/2	4	21	$540
PO36	Pull Out Tray 36"	35 1/2	4	21	$570
	Full-extension, undermount glides				



Waste Basket Cabinet

Code	Description	Width	Height	Depth	Price
TRASHBIN B15	Waste Basket Single 35Qt -15" Cabinet				$1,280
	Full-extension, undermount glides				



Waste Basket Cabinet

Code	Description	Width	Height	Depth	Price
TRASHBIN B18	Waste Basket Double 35Qt -18" Cabinet				$1,400
	Full-extension, undermount glides				



Spice Rack Insert

Code	Description	Width	Height	Depth	Price
SR INSERT 06	Spice Rack Insert 6"				$750
SR INSERT 09	Spice Rack Insert 9"				$834



Lazy Susan

Code	Description	Width	Height	Depth	Price
LS INSERT 33	Lazy Susan Insert Kidney-Shaped For LS33 28"				$800
LS INSERT 36	Lazy Susan Insert Kidney-Shaped For LS36 32"				$845

Cabinet Accessories



Super Susan

Code	Description	Width	Height	Depth	Price
SS INSERT 33	Super Susan 33” (Single)	24	3	13	$398
SS INSERT 36	Super Susan 36” (Single)	30	3	13	$430
		36	3	13	



Floating Shelf

Code	Description	Width	Height	Depth	Price
NSFS24-13	Natural Stain Floating Shelf 24"	24	3	13	$569
NSFS30-13	Natural Stain Floating Shelf 30"	30	3	13	$614
NSFS36-13	Natural Stain Floating Shelf 36"	36	3	13	$705



Floating Shelf

Code	Description	Width	Height	Depth	Price
OAKFS24-13	White Oak Floating Shelf 24"	24	3	13	$569
OAKFS30-13	White Oak Floating Shelf 30"	30	3	13	$614
OAKFS36-13	White Oak Floating Shelf 36"	36	3	13	$660

Cabinet Accessories

Floating Shelf

Code	Description	Width	Height	Depth	Price
PWFS24-13	Pure White Floating Shelf 24"	24	3	13	$569
PWFS30-13	Pure White Floating Shelf 30"	30	3	13	$614
PWFS36-13	Pure White Floating Shelf 36"	36	3	13	$660

Floating Shelf

Code	Description	Width	Height	Depth	Price
BLFS24-13	Black Walnut Floating Shelf 24"	24	3	13	$569
BLFS30-13	Black Walnut Floating Shelf 30"	30	3	13	$614
BLFS36-13	Black Walnut Floating Shelf 36"	36	3	13	$660



Touch Up Kit

Code	Description	Width	Height	Depth	Price
TUK	Touch Up Kit				$100

Cabinet Accessories

Super Susan







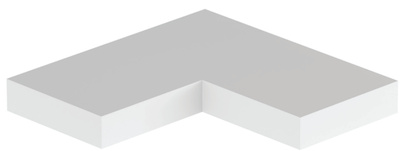

Code	Description	Width	Height	Depth	Price
BLFS24-24	Black Walnut L-Shaped Corner Floating Shelf	24	3	13	$690
NSFS24-24	Natural Stain L-Shaped Corner Floating Shelf	24	3	13	$690
OAKFS24-24	White Oak L-Shaped Corner Floating Shelf	24	3	13	$690
PWFS24-24	Pure White L-Shaped Corner Floating Shelf	24	3	13	$690

Panels, Fillers and Trim

3" Wide Filler



Code	Description	Width	Height	Depth	Price
F330	3/4" Thick Hardwood	3	30	0.625	$90
F336	3/4" Thick Hardwood	3	36	0.625	$107
F342	3/4" Thick Hardwood	3	42	0.625	$127
F396	3/4" Thick Hardwood	3	96	0.625	$285

6" Wide Filler



Code	Description	Width	Height	Depth	Price
F630	3/4" Thick Hardwood	6	30	0.625	$214
F636	3/4" Thick Hardwood	6	36	0.625	$227
F642	3/4" Thick Hardwood	6	42	0.625	$250
F696	3/4" Thick Hardwood	6	96	0.625	$570



Light Panel 96"

Code	Description	Width	Height	Depth	Price
P14X96LIGHT	Grooved For Light	96	0.75	14	$95

Pure White Corner Panel 24"

Code	Description	Width	Height	Depth	Price
PAWCLIGHT	Pure White Panel For Awc - Grooved For Light	24	41.875	13	$95

Panels, Fillers and Trim

Base End Panel

Code	Description	Width	Height	Depth	Price
BEP	Single Size Edgebanded No Factory Modifications	0.75	34.5	23.75	$108



Utility Decorative Panel

Code	Description	Width	Height	Depth	Price
UCDP84	Flush With Cabinet Door	24.625	79.5	0.75	$1,088
UCDP90	Flush With Cabinet Door	24.625	85.5	0.75	$1,170
UCDP96	Flush With Cabinet Door	24.625	91.5	0.75	$1,252

Panel Height = Nominal cabinet height less 4 1/2" toe kick



Base Decorative Panel

Code	Description	Width	Height	Depth	Price
BDP2430	Flush With Door Of Cabinet.	23.75	29.875	0.75	$569



Wall Decorative Panel

Code	Description	Width	Height	Depth	Price
WDP1412	Wall Decorative Panel 12"H	13.875	11.875	0.75	$264
WDP1418	Wall Decorative Panel 18"H	13.875	17.875	0.75	$296
WDP1430	Wall Decorative Panel 30"H	13.875	29.875	0.75	$354
WDP1436	Wall Decorative Panel 36"H	13.875	35.875	0.75	$386
WDP1442	Wall Decorative Panel 42"H	13.875	41.875	0.75	$440



Refrigerator End Panel

Code	Description	Width	Height	Depth	Price
REP3696	Single Size No Factory Modifications	36	96	0.75	$432
REP36120	Single Size No Factory Modifications	36	120	0.75	$864

Finished Back Panel

Code	Description	Width	Height	Depth	Price
FBP4896	Single Size No Factory Modifications	48	96	0.125	$224



Toe Kicks

Code	Description	Width	Height	Depth	Price
TK96	No Factory Modifications	96	4.5	0.125	$82

Light Moulding Shaker

Code	Description	Width	Height	Depth	Price
LMS	No Factory Modifications	96	2	0.75	$98

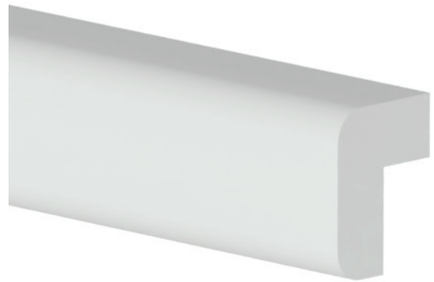

Light Moulding Flat

Code	Description	Width	Height	Depth	Price
LMF	Light Moulding Flat	96	2	1.5	$98



4.5" Crown Moulding Flat

Code	Description	Width	Height	Depth	Price
CMF	Crown Moulding Flat	96	4.5	1.5	$190



Decorative Base Moulding

Code	Description	Width	Height	Depth	Price
BM96	No Factory Modifications	96	4.5	0.75	$132

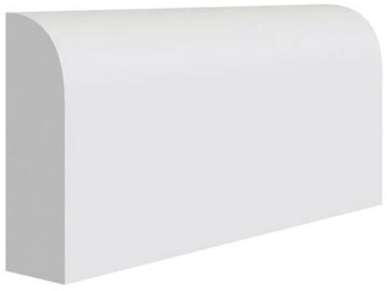

Scribe Moulding

Code	Description	Width	Height	Depth	Price
SM96	No Factory Modifications	96	0.75	0.25	$86



Outside Corner Moulding

Code	Description	Width	Height	Depth	Price
OCM96	No Factory Modifications	96	0.75	0.25	$63

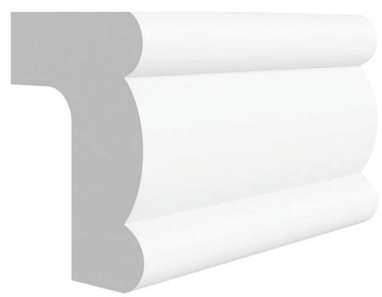

Light Moulding Classic

Code	Description	Width	Height	Depth	Price
LMC	No Factory Modifications	96	2	0.75	$98



Quarter Round Moulding

Code	Description	Width	Height	Depth	Price
QR96	No Factory Modifications	96	0.75	0.75	$56



Classic Crown Moulding

Code	Description	Width	Height	Depth	Price
CCM	Single Size 2 5/8" Projection No Factory Modifications	96	3.125	0.75	$138



Fluted Square Post

Code	Description	Width	Height	Depth	Price
FSP3X3	Flute Square Post	3	34.5	3	$406
FSP6X6	Flute Square Post	6	34.5	6	$773

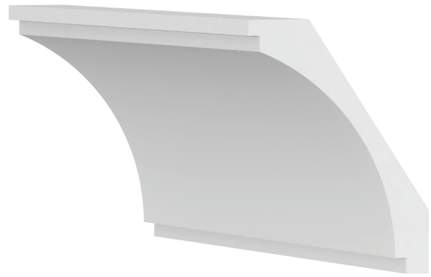

Classic Cove Moulding

Code	Description	Width	Height	Depth	Price
CVCM	Single Size 3" Projection No Factory Modifications	96	3.75	0.75	$138

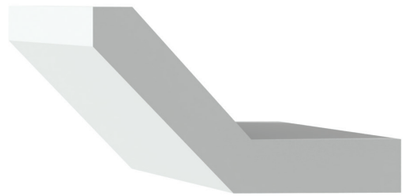

Angle Crown Moulding

Code	Description	Width	Height	Depth	Price
ACM	Single Size 4 3/8" Projection No Factory Modifications	96	3.75	0.75	$190

SOHO Panels, Fillers and Trim



SOHO 3" Wide Filler

Code	Description	Width	Height	Depth	Price
SOHO F330	Edgebanded 4 Sides	3	30	0.75	$43
SOHO F336	Edgebanded 4 Sides	3	36	0.75	$52
SOHO F342	Edgebanded 4 Sides	3	42	0.75	$60
SOHO F396	Edgebanded 4 Sides	3	96	0.75	$137

SOHO 6" Wide Filler

Code	Description	Width	Height	Depth	Price
SOHO F630	Edgebanded 4 Sides	6	30	0.75	$86
SOHO F636	Edgebanded 4 Sides	6	36	0.75	$103
SOHO F642	Edgebanded 4 Sides	6	42	0.75	$120
SOHO F696	Edgebanded 4 Sides	6	96	0.75	$273



SOHO Custom Panel

Code	Description	Width	Height	Depth	Price
SOHO Light Rail	Custom Panel Soho Panel Use 13 7/8" Wide Edgebanded 4 Sides			0.75	$69 /sq ft

SOHO Panels, Fillers and Trim



SOHO Base End Panel

Code	Description	Width	Height	Depth	Price
SOHO BEP	Full Panel Edgebanded 4 Sides	25	35	0.75	$415
SOHO VEP	Full Panel Edgebanded 4 Sides	22	35	0.75	$365



SOHO Wall End Panel

Code	Description	Width	Height	Depth	Price
SOHO WEP1412	Edgebanded 4 Sides	14	12	0.75	$80
SOHO WEP1418	Edgebanded 4 Sides	14	18	0.75	$120
SOHO WEP1430	Edgebanded 4 Sides	14	30	0.75	$199
SOHO WEP1436	Edgebanded 4 Sides	14	36	0.75	$239
SOHO WEP1442	Edgebanded 4 Sides	14	42	0.75	$279



SOHO Refrigerator End Panel

Code	Description	Width	Height	Depth	Price
SOHO REP3696	Single Size No Factory Modifications Edgebanded 4 Sides	36	96	0.75	$1,637

SOHO Panels, Fillers and Trim



SOHO Toe Kicks

Code	Description	Width	Height	Depth	Price
SOHO TK96	Toe Kick Door Material Edgebanded 4 Sides	96	4.5	0.75	$205



SOHO Tall Panel

Code	Description	Width	Height	Depth	Price
SOHO Tall 84	3/4" Thick Hardwood Edgebanded 4 sides	24 5/8	84	0.75	$980
SOHO Tall 90	3/4" Thick Hardwood Edgebanded 4 sides	24 5/8	90	0.75	$1,050
SOHO Tall 96	3/4" Thick Hardwood Edgebanded 4 sides	24 5/8	96	0.75	$1,165

SKU Prefix Legend

Cabinet Types

B	Base	**W**	Wall
V	Vanity	**SB**	Sink Base
DB	Drawer Base	**UC**	Utility (Tall)
FHB	Full Height Door Base	**BOC**	Base Oven Cabinet
BWR	Base Wine Rack	**ALS**	Base Easy Reach

Corner & Specialty Cabinets

WEZR	Wall Easy Reach	**BEA**	Base End Angle

Fillers & Decorative Panels

F	Filler	**BEP**	Base End Panels
WEP	Wall End Panels	**REP**	Refrigerator End Panels
UCDP	Utility Decorative Panel	**FBP**	Finished Back Panel

adornus™

Essential Series

Other Adornus Collections to consider!

Alusso | Euro-Modern

New level of luxury to the modern home.

Select from glossy, matte, or textured finishes.

Designer Series | Frameless

The solution for Semi-custom cabinetry.

Modify width, height, and depth within specs.

Miami Warehouse

10400 NW 21st Suite 115 Doral, Florida 33172

305.629.4800

New Jersey Warehouse

5 Santa Fe Way, Suite 501 East Windsor, NJ 08512

201.577.5421

www.adornus.com

