adornus™

Metropolitan Series
Specification Guide 2026



Table of Contents

- Limited Lifetime Warranty..... 4-6
- Policies and Procedures..... 7-8
- Metropolitan Series 9-12
- Build Information..... 13
- Door Sizing..... 14
- Face Frame Cabinet Specifications..... 15-20

Wall Cabinets

- Wall Cabinets Introduction..... 21-22
- Wall Cabinet SKU Listing..... 23-36

Base Cabinets

- Base Cabinets Introduction..... 37-38
- Base Cabinet SKU Listing..... 39-48

Vanity Cabinets

- Vanity Cabinets Introduction..... 49-50
- Vanity Cabinet SKU Listing..... 51-52

Accessories

- Accessory Introduction..... 53-54
- Accessory SKU Listing..... 55-68

Metropolitan Series

Quick & On Time

The Metropolitan Series is crafted to meet the core needs of nearly any project. From kitchens to laundry rooms to office spaces, this collection offers framed, modern, and practical cabinets ready fast.

Limited Lifetime Warranty

Adornus, LLC (“Adornus”) extends the following lifetime limited warranty (“Limited Warranty”) to the first residential purchaser (“Residential Purchaser”) of any cabinet sold by Adornus (each, a “Product”). This Limited Warranty is only applicable to Products sold to the first Residential Purchaser and used in the applications described below within the United States. Residential Purchaser may not assign or transfer this Limited Warranty. Under this Limited Warranty, a “Residential Purchaser” means any of the following:

- A person who purchases and installs the Product in a dwelling that is owned and used by that person as his/her primary or secondary home; or
- Any person or business such as a builder, contractor or developer that purchases and installs the Product in a newly constructed or remodeled dwelling that will be used by the initial owner/purchaser of that dwelling as a primary or secondary home. In such situation, this Limited Warranty may be assigned to the initial owner/purchaser who uses the dwelling as a primary or secondary home, but may not be transferred or assigned to subsequent owners of the dwelling.

Under this Limited Warranty, a primary or secondary home does not include rental property. This Limited Warranty does not apply to landlords, leasing companies, or other commercial purchasers. Subject to the exclusions and limitations set forth in this Limited Warranty, Adornus warrants to Residential Purchaser that each Product will be free from defects in material and workmanship, under normal use and maintenance, for the applicable warranty period stated below. This Limited Warranty gives Residential Purchaser specific legal rights, and Residential Purchaser may have other rights which vary from State to State. This Limited Warranty for Residential Purchasers begins on the date the Product was purchased, whether purchased by the Residential Purchaser or by a third party on Residential Purchaser’s behalf. This Limited Warranty is only valid if Residential Purchaser uses the dwelling as his/her primary or secondary home and does not extend to future owners if the property is sold.

THIS LIMITED WARRANTY IS ADORNUS’ SOLE AND EXCLUSIVE WARRANTY WITH RESPECT TO THE PRODUCTS. ALL IMPLIED WARRANTIES ARE STRICTLY LIMITED TO THE DURATION OF THE LIMITED WARRANTY APPLICABLE TO THE PRODUCT AS STATED HEREIN, INCLUDING BUT NOT LIMITED TO, ANY WARRANTY OF MERCHANTABILITY OR OF FITNESS FOR A PARTICULAR PURPOSE. IN NO EVENT SHALL ADORNUS BE LIABLE TO THE RESIDENTIAL PURCHASER OR ANY THIRD PARTY FOR INCIDENTAL OR CONSEQUENTIAL DAMAGES, INCLUDING, WITHOUT LIMITATION, DAMAGES ARISING FROM PERSONAL INJURY, LOST PROFITS, LOSS OF BUSINESS OPPORTUNITY, LOSS OF PROPERTY, ECONOMIC LOSSES, OR STATUTORY OR EXEMPLARY DAMAGES, WHETHER FROM NEGLIGENCE, WARRANTY, STRICT LIABILITY OR OTHERWISE.

Exclusions

This Limited Warranty does not apply to any Product:

- Installed or used outdoors;
- Used for purposes for which it is not designed or intended by Adornus;
- That has been subjected to misuse, vandalism, abuse, negligence, accident, or unauthorized modifications;
- That has been improperly stored (if the Product must be stored, it should be covered and stored in a humidity and temperature-controlled environment, away from direct sunlight);
- That has been improperly installed, cleaned, or maintained (for more information regarding the proper use and care of the Product);
- That has been subjected to improper temperature, moisture and/or humidity extremes (temperature outside the range of 50-85°F (10-29°C) and humidity outside the range of 30-55% are considered extreme);
- Damaged by fire, flood, acts of God, or other external causes beyond Adornus' control;
- Varying in color and characteristics due to age, sunlight, smoke, or other environmental conditions;
- Exhibiting any effects on the color and/or integrity of the finish or appearance due to the use of abrasive cleaners, cleaners that contain chlorine, acidic cleaners, scuffing sponges or steel wool; and/or
- Exhibiting normal wear and tear.

In addition, natural woods may vary in color and characteristics and exhibit subtle changes as they age. For example, painted doors, drawer fronts, and face frames may eventually have visible cracking around the joint area, and cabinet colors may darken or lighten over time. These variations are of the material in relation to their environmental exposure and are not covered under this Limited Warranty.

Sole and Exclusive Remedy

In the event of a defect in the workmanship or materials of a Product occurring during the Limited Warranty period described above, Adornus will, at its sole option, repair or replace any defective Product or Product component; provided, if it is not commercially feasible to repair or replace a defective Product or Product component, Adornus may refund the original price paid by Residential Purchaser for the defective Product or Product component, or provide a credit towards a similar type of product sold by Adornus. The foregoing, at Adornus' option, are the Residential Purchaser's sole and exclusive remedies for any Product defect or non-conformity. In addition, by way of example but not limitation, the following costs and expenses are not covered by this Limited Warranty:

(1) labor costs for the original installation, removal, or reinstallation of the Product, or any defective part thereof; (2) labor costs or material charges for the removal, reinstallation, repainting, refinishing or replacement of any other items or building materials which must be removed, replaced, reinstalled, or refinished in order to repair or replace the defective Product or component. For example, costs associated with the following will not be reimbursed: counters, sinks, tiles, flooring, accessories, appliances or plumbing fixtures. When a claim for warpage, joint separation or wood growth is submitted, Adornus may, at its sole option and after inspection, defer action for up to twelve (12) months to allow the Product to acclimate to the installed environment. Further, Adornus reserves the right to modify or alter any Product design, specifications or materials without obligation to make similar changes to Products previously sold by Adornus. The repair or replacement remedies offered by Adornus under this Limited Warranty are contingent on the current Product offerings of styles and construction options within Adornus' Product line at the time a warranty claim is made by Residential Purchaser. If a valid warranty claim is filed for an obsolete Product, Adornus reserves the right, at its sole option, to honor its repair or replacement obligations under this Limited Warranty by either: (1) replacing the affected Product or component with a new Product or component of the same or approximate style or color from Adornus' current Product line or offerings; or (2) replacing the affected Product or component to achieve a uniform appearance with a similar or comparable product style or approximate color of the originally purchased Product style. If a Product or components are replaced or repaired, Adornus cannot guarantee an exact match with the finish or appearance of other products or fixtures installed at Residential Purchaser's dwelling. This is due to changes that may occur during the Products' natural aging process, which may affect its color and/or grain.

Limitation of Liability

Except as otherwise required by applicable law, the remedies described above are the Residential Purchaser's sole and exclusive remedies and Adornus' entire liability for any breach of this Limited Warranty. Adornus' total liability shall under no circumstances exceed the actual amount paid by Residential Purchaser for the defective Product.

All potential claims hereunder must be submitted to Adornus, in writing, at the address below and must specify the defects present in the Products and/or Product components.

Dealer Responsibilities

Dealer acknowledges and agrees that it is solely responsible for communicating all policies, product information, order details, installation instructions, delivery expectations, and claim procedures to its customers.

The company shall not communicate directly with the dealer's customers. The company shall not be liable for any inaccurate, incomplete, or misleading information provided by the Dealer or its representatives.

Order Placement

Orders may be submitted by dealer using the company's online portal, approved order forms, 2020 Design or ProKitchen SKU lists, or email through a designated customer service representative.

Orders submitted by telephone will not be accepted.

Dealer shall review and confirm all orders for accuracy, including but not limited to:

- Cabinet sizes and configurations
- Modifications and custom notes
- Finished ends and hinge directions
- Color, style, and material selections
- Quantities
- Shipping method

Once an order has been confirmed and approved by dealer, dealer assumes full responsibility for the accuracy and completeness of the order.

Changes, Cancellations, and Restocking Fees

Semi-custom, assembled, and modified orders shall not be changed, canceled, or returned after submission to production.

Stock (RTA) orders may be changed prior to release to the warehouse for fulfillment.

Orders that have been shipped or palletized shall incur a twenty-five percent (25%) restocking fee and the dealer shall be responsible for return freight costs, if applicable.

Non-returnable items include:

- Semi-custom (made to order) cabinets
- Modified cabinets
- Assembled cabinets
- RTA cabinets assembled by the dealer or end customer
- Special-order or custom-size cabinets

Delivery and Pick Up

Dealer may select from the following delivery options:

(a) Pick up at an Adornus warehouse;
(b) Company truck curbside delivery;
(c) White-glove delivery for an additional fee;
(d) Common carrier scheduled curbside delivery by company;
(e) Common carrier scheduled by dealer.

Rescheduled deliveries may incur a rescheduling fee.

Inspection and Claims

Dealer or its designated representative shall inspect all shipments immediately upon receipt.

Dealer shall verify and sign for both piece count and pallet count.

Claims for unconcealed damages or shortages must be noted on the bill of lading at the time of delivery and reported to the Adornus immediately. Claims without proper documentation may be rejected.

Claims for concealed damage must be reported within 7 business days of delivery via email to receptiondesk@adornus.com, including photos, order number, item numbers, and detailed description.

Claims for concealed damages must be reported prior to installation via email to receptiondesk@adornus.com, including photos, order number, item numbers, and detailed description.

Product Warranty

Please refer to the Adornus official product warranty policy form.

Dealer Conduct and Compliance

Dealer agrees to:

- Provide accurate information to customers
- Represent Adornus products professionally
- Maintain all account terms in good standing
- Adhere to all policies and procedures outlined in this agreement

Non-compliance may result in suspension or termination of Dealer privileges.

METROPOLITAN SERIES

Elevating the Metropolitan

The Metropolitan Series combines essential functionality with modern style, making it ideal for kitchens and laundry areas. This Cabinet line ensures you get quality cabinets without long waiting periods. Designed to keep projects moving efficiently, it delivers reliability without sacrificing aesthetics.

Quick & On Time

- Ensures fast production and delivery to keep your projects moving smoothly.
- Designed to meet tight timelines without compromising quality.
- Reliable scheduling that guarantees your cabinets arrive exactly when needed.



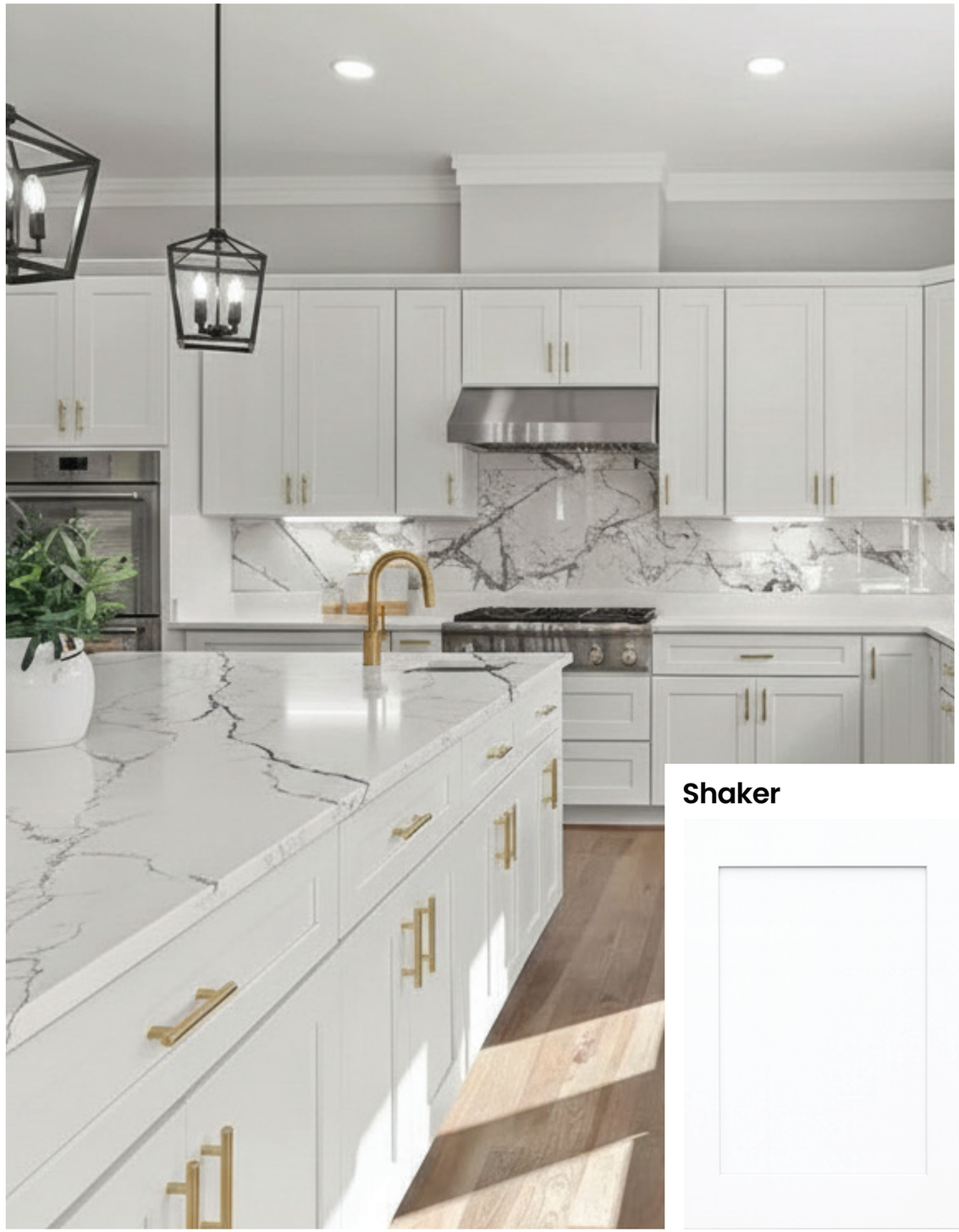

Shaker

Metropolitan Series

Doors and Drawer Fronts

Our Metropolitan Series features a five piece MDF door and drawer front. MDF doors and drawer fronts are ideal for painted cabinetry. Painted MDF doors and drawers resist natural expansion and contraction that sometimes occur in solid wood doors from moisture and temperature changes within a natural environment.

Frames

Cabinet face frames are 3/4" solid hardwood with 1 1/2" wide stiles and rails glued using domino tenon joinery.

Case Construction and Interiors

1/2" plywood is standard and interiors will be UV Birch veneer. Matching color exterior is offered as a standard.

Back

Cabinet backs are ½" plywood with interior UV Birch veneer. The back is attached to the cabinet sides using the rabbet joinery method.

Plywood I-Beams

Two 2½ x ½ plywood beams grooved into the side and back panels for strength and stability.
I-beams are essential to creating a sturdier box.

Shelves and Supports

Adjustable shelves are 3/4" UV Birch veneer plywood, front edge banded. Base cabinets have an 18" deep shelf. Wall cabinets have an 11" deep shelf. The shelf supports are nickel-plated steel pegs in 5mm holes, adjustable in 32mm increments.

Metropolitan Series

Drawers

Drawers are 5/8" solid wood sides, dovetailed front and back with a 1/4" birch veneer panel captured bottom.

Toe Space

Toe space is 1/2" plywood (matching front face) 4 1/2" high and 3 1/4". 1/4" matching finished toe kick board is available as an accessory.

Build Information

Cabinet Construction

The Metropolitan Series is designed for versatility and everyday functionality. Perfect for kitchens, closets, laundry spaces, or work areas, it offers modern, dependable cabinetry with quick turnaround times.



1. MDF 5-piece door and drawer front.
2. Soft close, six-way adjustable hinges.
3. 5/8" solid wood dovetailed drawer with 3/8" plywood bottom. Full extension soft close concealed drawer runners.
4. 3/4" x 1 1/2" solid hardwood frame.
5. 1/2" birch veneered plywood back with a natural finished interior.
6. 1/2" birch veneered side panels with a natural finished interior.
7. 3/4" birch veneered plywood adjustable shelves with a natural finish.
8. 1/2" x 4 1/2" birch veneered plywood finished to match exterior finish.
9. 2 1/2" x 1/2" plywood panel beams grooved into the side panels for strength and stability.
10. Base cabinet has 18" deep shelves.

Door Sizing

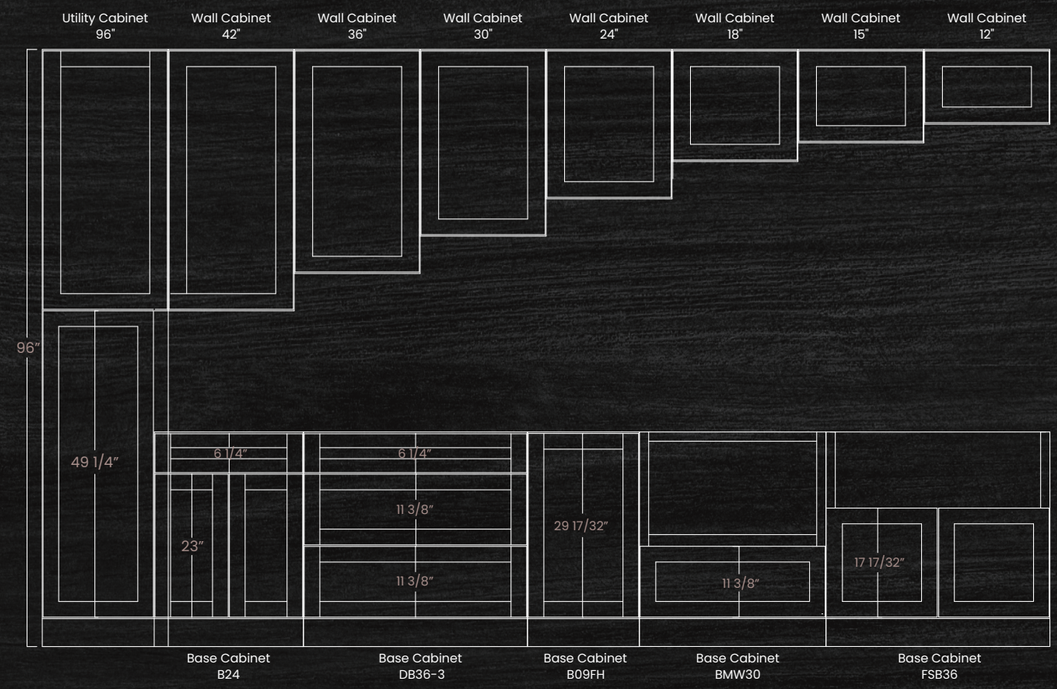

Reveals

Wall Cabinets

- 1/4" reveal on left and right sides
- 1/8" on top and bottom

Base and Vanity Cabinets

- 1/4" on left and right side
- 1/4" on top, no reveal on bottom
- 1/4" between doors and drawer fronts

Utility Cabinets

- 1/4" reveal on left and right sides
- 1/8" on top, no reveal on bottom
- 1/4" between top and bottom doors

Alignment

Utility Cabinet 84"

Top door lines up with 30" Wall Cabinet

Utility Cabinet 90"

Top door lines up with 36" Wall Cabinet

Utility Cabinet 96"

Top door lines up with 42" Wall Cabinet

Cabinet Specifications

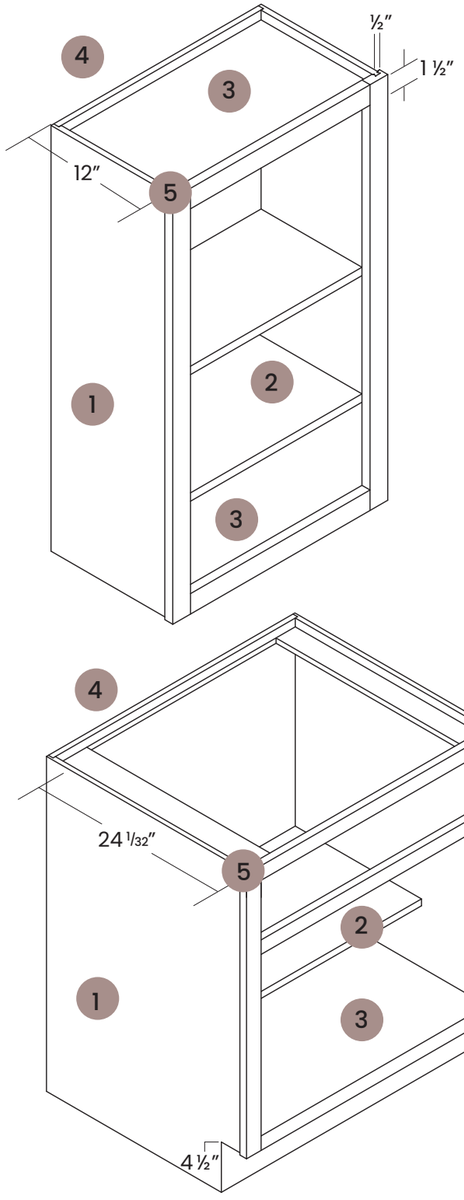

1. 1/2″ Sides
2. 3/4″ Adjustable Shelves with Metal Shelf Clips
3. 1/2″ Top and Bottom
4. 1/2″ Plywood Back
5. 1/4" Reveal

1. 1/2″ Sides
2. 3/4″ Adjustable Shelves with Metal Shelf Clips
3. 1/2″ Bottom
4. 1/2″ Plywood Back
5. 1/4" Reveal

Utility, Wall and Base Cabinet Specifications

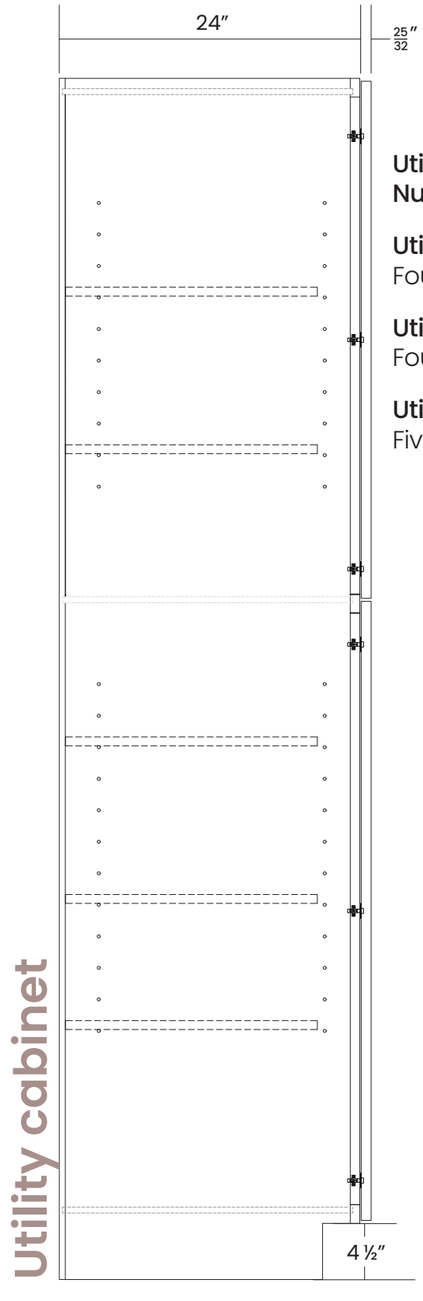

Utility Cabinet Number of Shelves:

Utility 84″
Four Shelves

Utility 90″
Four Shelves

Utility 96″
Five Shelves

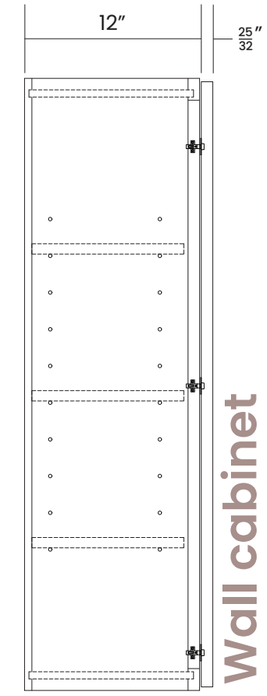

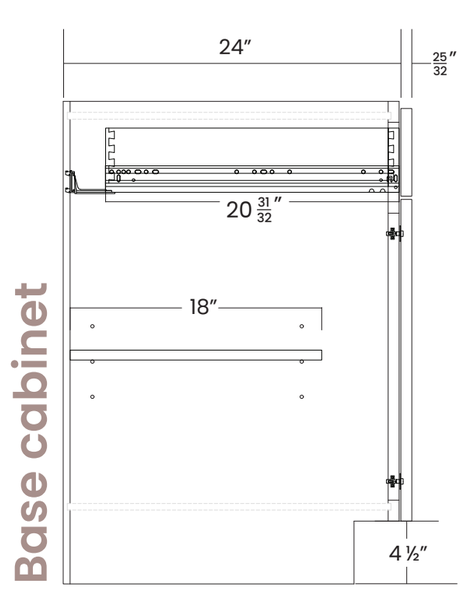

Oven Cabinet Specifications

Oven cabinet

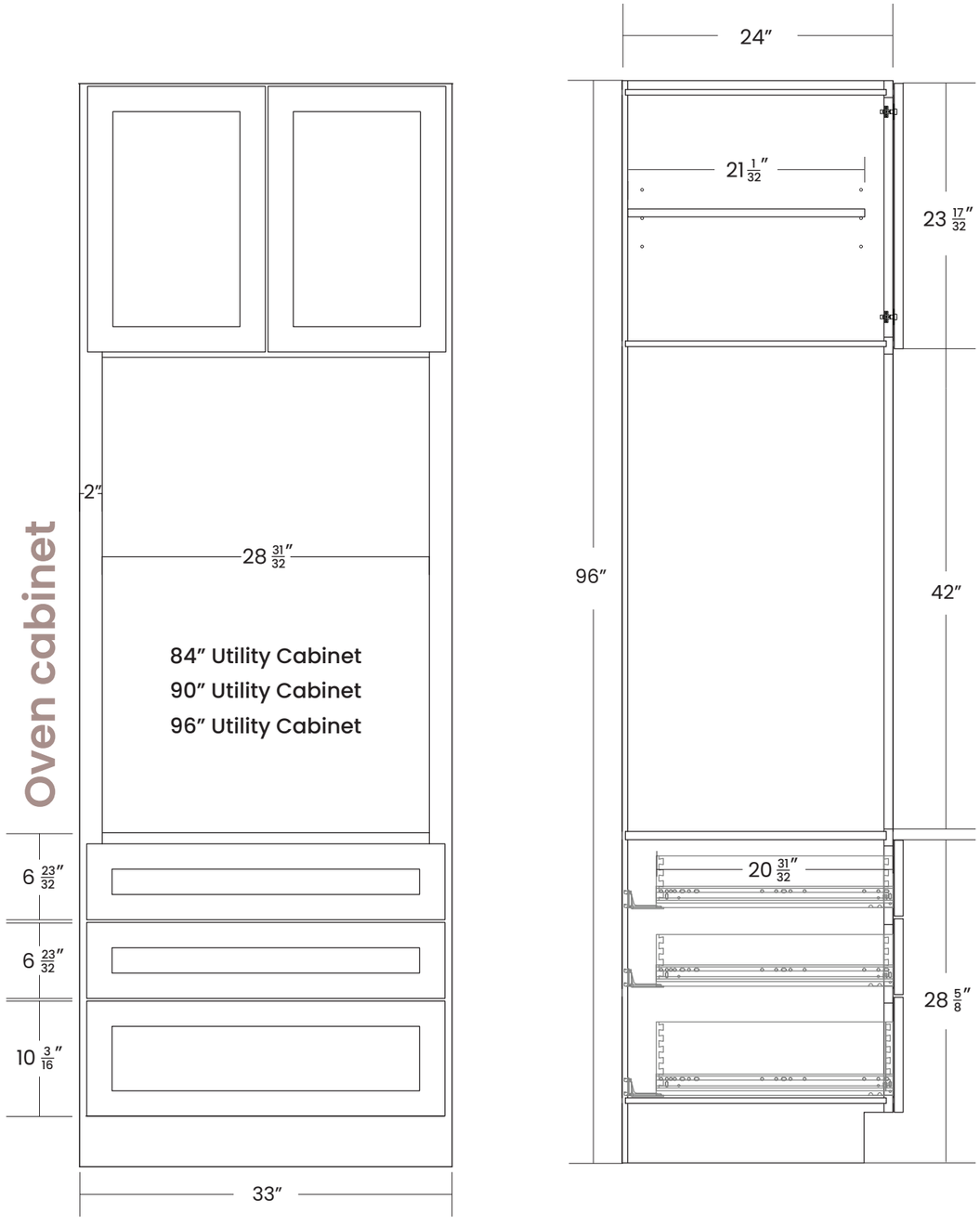

Oven Cabinet Specifications

Consider the height of any appliances before selecting the number of drawers for oven cabinets.

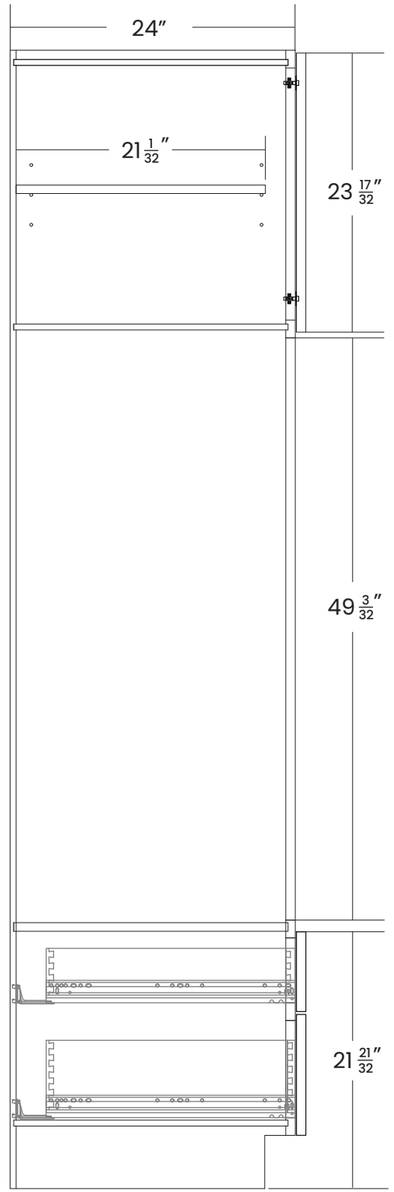

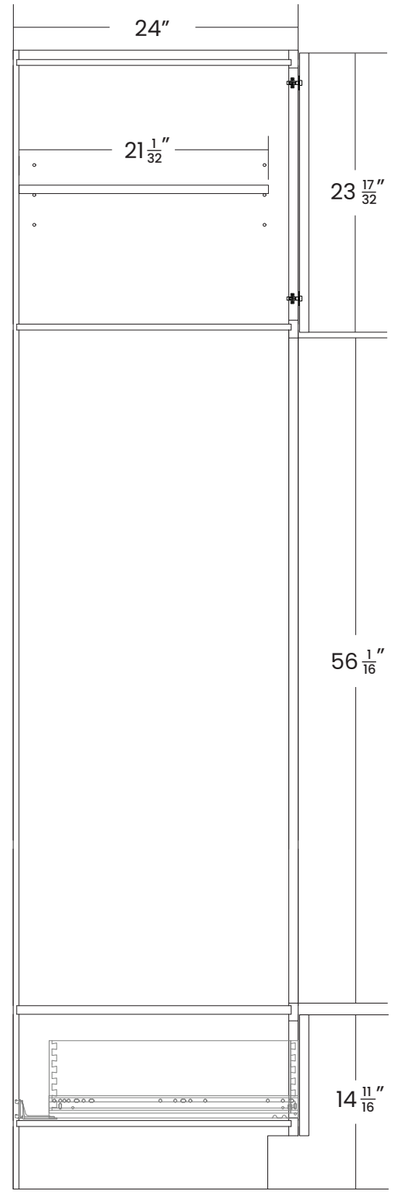

Blind Corner Cabinet Specifications

Wall blind corner

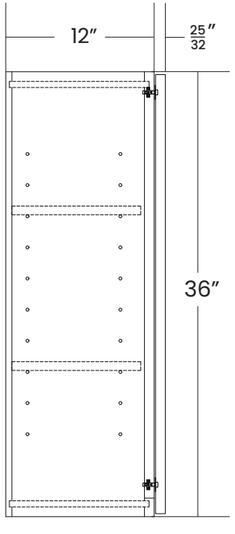

*NO PULL REQUIRED

Shown blind right

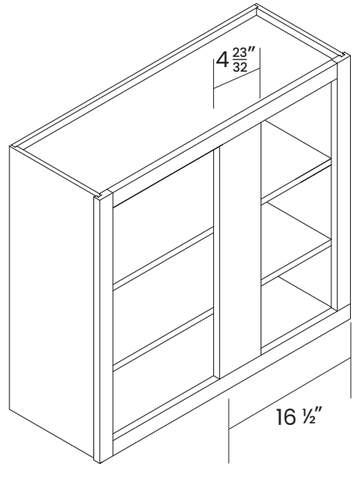

Base blind corner

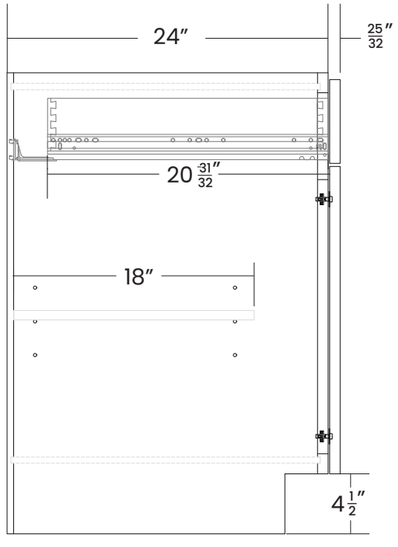

Base Cabinet
BBC39

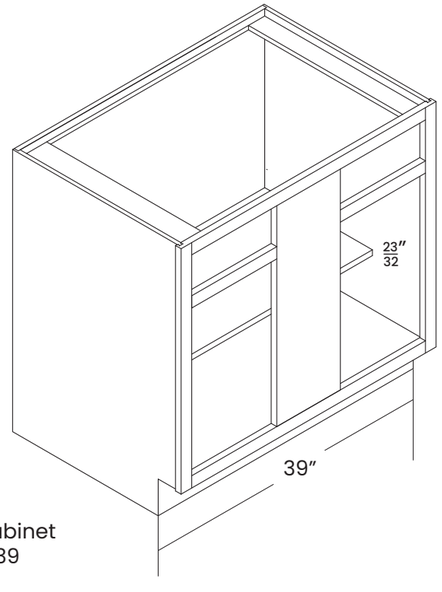

HINGE SIDE DETERMINES BLIND SIDE (BLIND LEFT = HINGE LEFT)

Angle Cabinet Specifications

Wall angle cabinet 24″

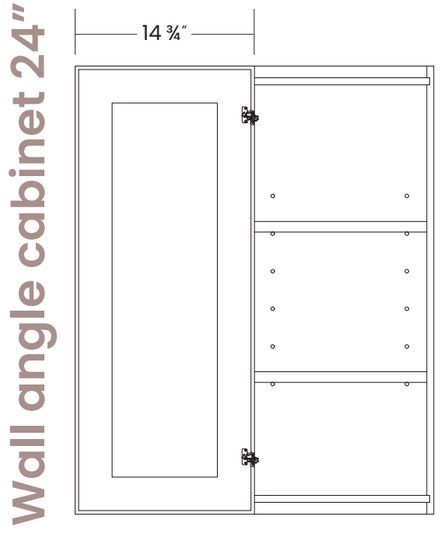

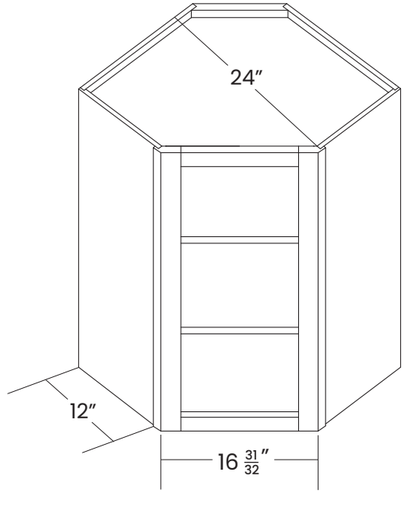



Wall Cabinets Introduction



Wall Cabinets

Efficiently utilize vertical space and keep your counter tops clear from clutter without the loss of luxury and refinement.

Cabinet Code Example

A wall cabinet that is 18" wide by 42" tall.

Code	Width	Height	Depth
W1842	18	42	12

SKU code is **W1842.**

Designer/Owner Recommendations

Consider the placement of wall cabinets to maximize functionality and aesthetics. Position them at a comfortable height for easy access and ensure they are evenly spaced for a balanced look.

Regularly clean and maintain your framed wall cabinets to ensure they remain in optimal condition. Use a gentle cleaning solution and soft cloth to remove dust and debris and avoid harsh chemicals or abrasive materials that could damage the finish.

Installation Notes

Ensure that your wall cabinets are level and installed securely. Use appropriate hardware and mounting techniques to prevent sagging or shifting over time.

Utilize interior accessories such as adjustable shelves to optimize storage space and organization within the cabinets. This will help make the most of the available space and keep all items neatly organized.

Wall Cabinets



Wall Cabinet 12" High Double Door

Code	Description	Width	Height	Depth	Price
W2412	Double Door No Shelf	24	12	12	$428
W2712	Double Door No Shelf	27	12	12	$470
W3012	Double Door No Shelf	30	12	12	$488
W3312	Double Door No Shelf	33	12	12	$518
W3612	Double Door No Shelf	36	12	12	$548



Wall Cabinet 15" High Double Door

Code	Description	Width	Height	Depth	Price
W2415	Double Door No Shelf	24	15	12	$475
W2715	Double Door No Shelf	27	15	12	$510
W3015	Double Door No Shelf	30	15	12	$570
W3315	Double Door No Shelf	33	15	12	$623
W3615	Double Door No Shelf	36	15	12	$611

Wall Cabinets



Wall Cabinet 18" High Double Door

Code	Description	Width	Height	Depth	Price
W2418	Double Door No Shelf	24	18	12	$433
W2718	Double Door No Shelf	27	18	12	$538
W3018	Double Door No Shelf	30	18	12	$648
W3318	Double Door No Shelf	33	18	12	$661
W3618	Double Door No Shelf	36	18	12	$673



Wall Cabinet 24" High Double Door

Code	Description	Width	Height	Depth	Price
W3024	Double Door 1 Adjustable Shelf	30	24	12	$759
W3624	Double Door 1 Adjustable Shelf	36	24	12	$859

Wall Cabinets



Wall Cabinet 30" High Single Door

Code	Description	Width	Height	Depth	Price
W0930	Single Door 2 Adjustable Shelves	09	30	12	$447
W1230	Single Door 2 Adjustable Shelves	12	30	12	$510
W1530	Single Door 2 Adjustable Shelves	15	30	12	$553
W1830	Single Door 2 Adjustable Shelves	18	30	12	$638
W2130	Single Door 2 Adjustable Shelves	21	30	12	$704



Wall Cabinet 30" High Double Door

Code	Description	Width	Height	Depth	Price
W2430	Double Door 2 Adjustable Shelves	24	30	12	$790
W2730	Double Door 2 Adjustable Shelves	27	30	12	$855
W3030	Double Door 2 Adjustable Shelves	30	30	12	$920
W3330	Double Door 2 Adjustable Shelves	33	30	12	$985
W3630	Double Door 2 Adjustable Shelves	36	30	12	$1,050

Wall Cabinets



Wall Cabinet 36" High Single Door

Code	Description	Width	Height	Depth	Price
W0936	Single Door 2 Adjustable Shelves	09	36	12	$499
W1236	Single Door 2 Adjustable Shelves	12	36	12	$569
W1536	Single Door 2 Adjustable Shelves	15	36	12	$641
W1836	Single Door 2 Adjustable Shelves	18	36	12	$714
W2136	Single Door 2 Adjustable Shelves	21	36	12	$788



Wall Cabinet 36" High Double Door

Code	Description	Width	Height	Depth	Price
W2436	Double Door 2 Adjustable Shelves	24	36	12	$883
W2736	Double Door 2 Adjustable Shelves	27	36	12	$956
W3036	Double Door 2 Adjustable Shelves	30	36	12	$1,030
W3336	Double Door 2 Adjustable Shelves	33	36	12	$1,103
W3636	Double Door 2 Adjustable Shelves	36	36	12	$1,176

Wall Cabinets



Wall Cabinet 42" High Single Door

Code	Description	Width	Height	Depth	Price
W0942	Single Door 3 Adjustable Shelves	09	42	12	$575
W1242	Single Door 3 Adjustable Shelves	12	42	12	$657
W1542	Single Door 3 Adjustable Shelves	15	42	12	$743
W1842	Single Door 3 Adjustable Shelves	18	42	12	$829
W2142	Single Door 3 Adjustable Shelves	21	42	12	$916



Wall Cabinet 42" High Double Door

Code	Description	Width	Height	Depth	Price
W2442	Double Door 3 Adjustable Shelves	24	42	12	$1,034
W2742	Double Door 3 Adjustable Shelves	27	42	12	$1,122
W3042	Double Door 3 Adjustable Shelves	30	42	12	$1,208
W3342	Double Door 3 Adjustable Shelves	33	42	12	$1,295
W3642	Double Door 3 Adjustable Shelves	36	42	12	$1,381

Wall Cabinets



Refrigerator Wall Cabinet

Code	Description	Width	Height	Depth	Price
W301224	Double Door No Shelf	30	12	24	$632
W331224	Double Door No Shelf	33	12	24	$673
W361224	Double Door No Shelf	36	12	24	$712



Refrigerator Wall Cabinet

Code	Description	Width	Height	Depth	Price
W301824	Double Door No Shelf	30	18	24	$750
W331824	Double Door No Shelf	33	18	24	$801
W361824	Double Door No Shelf	36	18	24	$851

Wall Cabinets



Refrigerator Wall Cabinet

Code	Description	Width	Height	Depth	Price
W302424	Double Door 1 Adjustable Shelf	30	24	24	$982
W332424	Double Door 1 Adjustable Shelf	33	24	24	$946
W362424	Double Door 1 Adjustable Shelf	36	24	24	$1,112



Wall End Open Shelf

Code	Description	Width	Height	Depth	Price
WEOS0936	3 Shelves	06	36	12	$516
WEOS1242	3 Shelves	06	42	12	$530

Wall Cabinets



Wall End Open Shelf

Code	Description	Width	Height	Depth	Price
WEOS0930	2 Shelves	06	30	12	$475



Wall Angle End Cabinet

Code	Description	Width	Height	Depth	Price
WAE1230	2 Adjustable Shelves	12	30	12	$534
WAE1236	2 Adjustable Shelves	12	36	12	$534

Wall Cabinets



Wall Angle End Cabinet

Code	Description	Width	Height	Depth	Price
WAE1242	3 Adjustable Shelves	12	42	12	$534



Wall Blind Corner Cabinet

Code	Description	Width	Height	Depth	Price
WBC2736	Single Door 2 Adjustable Shelves	27	36	12	$877
WBC3336	Single Door 2 Adjustable Shelves	33	36	12	$1,006

Hinge side determines blind side.
Blind Left = Hinge Left; Blind Right = Hinge Right.

Wall Cabinets



Wall Blind Corner Cabinet

Code	Description	Width	Height	Depth	Price
WBC2730	Single Door 2 Adjustable Shelves	27	30	12	$785
WBC3330	Single Door 2 Adjustable Shelves	33	30	12	$901

Hinge side determines blind side.
Blind Left = Hinge Left; Blind Right = Hinge Right.



Wall Blind Corner Cabinet

Code	Description	Width	Height	Depth	Price
WBC2742	Single Door 3 Adjustable Shelves	27	42	12	$1,024
WBC3342	Single Door 3 Adjustable Shelves	33	42	12	$1,175

Hinge side determines blind side.
Blind Left = Hinge Left; Blind Right = Hinge Right.

Wall Cabinets



Wall Diagonal Corner

Code	Description	Width	Height	Depth	Price
WDC2412	Single Door No Shelf	24	12	24	$659
WDC2415	Single Door No Shelf	24	15	24	$707
WDC2418	Single Door No Shelf	24	18	24	$771



Wall Diagonal Corner

Code	Description	Width	Height	Depth	Price
WDC2442	Single Door 3 Adjustable Shelves	24	42	24	$1,345

Wall Cabinets



Wall Diagonal Corner

Code	Description	Width	Height	Depth	Price
WDC2430	Single Door 2 Adjustable Shelves	24	30	24	$1,034
WDC2436	Single Door 2 Adjustable Shelves	24	36	24	$1,140



Wall Easy Reach Cabinet

Code	Description	Width	Height	Depth	Price
WEZR2412	Bi-Fold Door 9 15/16" Wide Doors	24	12	24	$754
WEZR2415	Bi-Fold Door 9 15/16" Wide Doors	24	15	24	$845
WEZR2418	Bi-Fold Door 9 15/16" Wide Doors	24	18	24	$950

Wall Cabinets



Wall Easy Reach Cabinet

Code	Description	Width	Height	Depth	Price
WEZR2430	Bi-Fold Door 9 15/16" Wide Doors 2 Shelves	24	30	24	$1,143
WEZR2436	Bi-Fold Door 9 15/16" Wide Doors 2 Shelves	24	36	24	$1,248

Wall Cabinets



Wall Easy Reach Cabinet

Code	Description	Width	Height	Depth	Price
WEZR2442	Bi-Fold Door 9 15/16" Wide Doors 3 Shelves	24	42	24	$1,492



Base Cabinets Introduction



Base Cabinets

Choose from a wide range of base cabinets to suit your individual tastes and preferences.

Cabinet Code Example

A base cabinet that is 21" wide by 34 1/2" tall.

Code	Width	Height	Depth
B21	21	34 1/2	24

SKU code is **B21.**

Note that the standard height of a base cabinet is 34 1/2" and the standard depth is 24".

Designer/Owner Recommendations

Measure the space carefully and choose base cabinets that fit seamlessly into the layout. Consider the dimensions of the room, as well as any appliances or fixtures that the cabinets will need to accommodate.

Regularly clean and maintain your framed base cabinets to ensure they remain in optimal condition. Use a gentle cleaning solution and soft cloth to remove dust and debris, and avoid harsh chemicals or abrasive materials that could damage the finish,

Installation Notes

Before installation, carefully inspect all cabinets. If a cabinet has a critical flaw, be sure to set it aside and contact us to claim damage. Pictures will be requested of any cabinets with defects or faults and must be submitted before a claim can be processed.

Perform a final inspection to ensure that all base cabinets are installed properly for stability and functionality. Use appropriate mounting hardware for installation to prevent sagging or shifting over time.

Base Cabinets



Base Cabinet - Single Door and Drawer

Code	Description	Width	Height	Depth	Price
B12	Single Door 1 Drawer 1 Adjustable Shelf	12	34 1/2	24	$829
B15	Single Door 1 Drawer 1 Adjustable Shelf	15	34 1/2	24	$904
B18	Single Door 1 Drawer 1 Adjustable Shelf	18	34 1/2	24	$979
B21	Single Door 1 Drawer 1 Adjustable Shelf	21	34 1/2	24	$1,054



Base Full Height Cabinet

Code	Description	Width	Height	Depth	Price
B09FH	Single Door	09	34 1/2	24	$565

Base Cabinets



Base Cabinet - Double Door and Single Drawer

Code	Description	Width	Height	Depth	Price
B24	Double Door 1 Drawer 1 Adjustable 18" Depth Shelf	24	34 1/2	24	$1,150
B27	Double Door 1 Drawer 1 Adjustable 18" Depth Shelf	27	34 1/2	24	$1,230
B30	Double Door 1 Drawer 1 Adjustable 18" Depth Shelf	30	34 1/2	24	$1,357
B33	Double Door 1 Drawer 1 Adjustable 18" Depth Shelf	33	34 1/2	24	$1,510
B36	Double Door 2 Drawers 1 Adjustable 18" Depth Shelf	36	34 1/2	24	$1,588



Diagonal Sink Base

Code	Description	Width	Height	Depth	Price
CSB36	Single Door 1 False Panel	36	34 1/2	24	$1,282
CSB42	Single Door 1 False Panel	42	34 1/2	24	$1,379

Base Cabinets



Sink Base Cabinet

Code	Description	Width	Height	Depth	Price
SB24	Double Door 1 False Drawer Front	24	34 1/2	24	$904
SB27	Double Door 1 False Drawer Front	27	34 1/2	24	$964
SB30	Double Door 1 False Drawer Front	30	34 1/2	24	$1,024
SB33	Double Door 1 False Drawer Front	33	34 1/2	24	$1,087
SB36	Double Door 1 False Drawer Front	36	34 1/2	24	$1,147

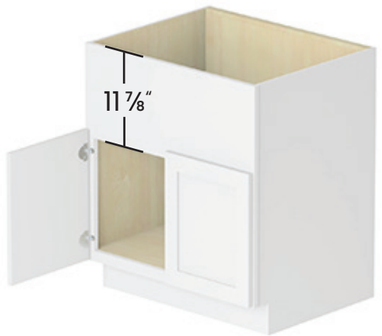

Farm Sink Base Cabinet

Code	Description	Width	Height	Depth	Price
FSB30	Double Door 1 False Panel	30	34 1/2	24	$1,104
FSB36	Double Door 1 False Panel	36	34 1/2	24	$1,247

Base Cabinets



Angle Base Cabinet

Code	Description	Width	Height	Depth	Price
BEC-R	Single Door 2 Shelves	12	34 1/2	12	$830
BEC-L	Single Door 2 Shelves 12" depth on smaller side	12	34 1/2	12	$830

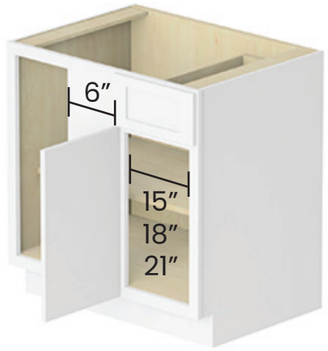

Blind Corner Base Cabinet

Code	Description	Width	Height	Depth	Price
BBC39	Single Door One Drawer 1 Fixed 18" Depth Shelf	39	34 1/2	24	$1,320
BBC42	Single Door One Drawer 1 Fixed 18" Depth Shelf	42	34 1/2	24	$1,392
BBC45	Single Door One Drawer 1 Fixed 18" Depth Shelf	45	34 1/2	24	$1,524
	Hinge side determines blind side. Blind Left = Hinge Left; Blind Right = Hinge Right.				

Base Cabinets



3 Drawers Base Cabinet

Code	Description	Width	Height	Depth	Price
DB12-3	3 Drawers	12	34 1/2	24	$1,303
DB15-3	3 Drawers	15	34 1/2	24	$1,412
DB18-3	3 Drawers	18	34 1/2	24	$1,521
DB21-3	3 Drawers	21	34 1/2	24	$1,630
DB24-3	3 Drawers	24	34 1/2	24	$1,741
DB27-3	3 Drawers	27	34 1/2	24	$1,853
DB30-3	3 Drawers	30	34 1/2	24	$1,966
DB33-3	3 Drawers	33	34 1/2	24	$2,079
DB36-3	3 Drawers	36	34 1/2	24	$2,192



Microwave Cabinet

Code	Description	Width	Height	Depth	Price
BMW30	1 Bottom Drawer	30	34 1/2	24	$1,177
	Microwave opening provided				

Base Cabinets



Easy Reach Base Cabinet

Code	Description	Width	Height	Depth	Price
BER33	No Trays 1 Adjustable Shelf	33	34 1/2	33	$1,422
BER36	No Trays 1 Adjustable Shelf	36	34 1/2	36	$1,556

Utility Cabinets



Utility Cabinet (Pantry)

Code	Description	Width	Height	Depth	Price
UC1890	Double Door 4 Adjustable Shelves	18	90	24	$2,009
UC1896	Double Door 5 Adjustable Shelves	18	96	24	$2,111



Utility Cabinet (Pantry)

Code	Description	Width	Height	Depth	Price
UC1884	Double Door 4 Adjustable Shelves	18	84	24	$1,915

Utility Cabinets



Utility Cabinet (Pantry)

Code	Description	Width	Height	Depth	Price
UC2484	Four Door 4 Adjustable Shelves	24	84	24	$2,338
UC2490	Double Door 4 Adjustable Shelves	24	90	24	$2,446
UC2496	Double Door 5 Adjustable Shelves	24	96	24	$2,573



Utility Cabinet (Pantry)

Code	Description	Width	Height	Depth	Price
UC3084	Four Door 4 Adjustable Shelves	30	84	24	$2,727

Utility Cabinets



Oven Cabinet With Drawers

Code	Description	Width	Height	Depth	Price
OC3384	Double Door 3 Drawers	33	84	24	$3,175
OC3390	Double Door 3 Drawers	33	90	24	$3,471
OC3396	Double Door 3 Drawers	33	96	24	$3,756

Utility Cabinets



Utility Cabinet (Pantry)

Code	Description	Width	Height	Depth	Price
UC3090	Four Door 4 Adjustable Shelves	30	90	24	$2,852
UC3096	Four Door 5 Adjustable Shelves	30	96	24	$2,994



VANITY CABINETS

Vanity Cabinets Introduction



Vanity Cabinets

Choose from a wide range of vanity cabinets and customize smaller spaces.

Cabinet Code Example

A vanity sink base cabinet at 30" wide by 34 1/2" tall and 21" deep.

Code	Width	Height	Depth
VSB30	30	34 1/2	21

SKU code is **VSB30**

Note that the standard height of a vanity cabinet is 34 1/2" and the standard depth is 21".

Designer/Owner Recommendations

Ensure that any selection or combination of vanity cabinets is properly sized to fit within the install space while also accommodating plumbing fixtures. Adornus will not alter these cabinets for plumbing fixtures and any modifications for plumbing will need to be done on site via the installer.

Installation Notes

Before installation, carefully inspect the cabinets. If a cabinet has a critical flaw, be sure to set it aside and contact us to claim damage. Pictures will be requested of any cabinets with defects or faults and must be submitted before a claim can be processed.

Vanity Cabinets



Vanity Base Cabinet

Code	Description	Width	Height	Depth	Price
VB12	Single Door 1 Drawer 1 Adjustable Shelf	12	34 1/2	21	$802
VB15	Single Door 1 Drawer 1 Adjustable Shelf	15	34 1/2	21	$877
VB18	Single Door 1 Drawer 1 Adjustable Shelf	18	34 1/2	21	$959



Vanity Sink Base Cabinet

Code	Description	Width	Height	Depth	Price
VSB24	Double Door 1 False Drawer Front	24	34 1/2	21	$863
VSB30	Double Door 1 False Drawer Front	30	34 1/2	21	$981
VSB36	Double Door 2 False Drawer Front	36	34 1/2	21	$1,102

Vanity Cabinets



Vanity Drawer Base Cabinet

Code	Description	Width	Height	Depth	Price
VDB12-3	3 Drawers	12	34 1/2	21	$1,135
VDB15-3	3 Drawers	15	34 1/2	21	$1,231
VDB18-3	3 Drawers	18	34 1/2	21	$1,328



Knee Drawer

Code	Description	Width	Height	Depth	Price
VKD24	24" Vanity Knee Drawer	24	7	21	$529
VKD30	30" Vanity Knee Drawer	30	7	21	$597



ACCESSORIES

Accessory Introduction

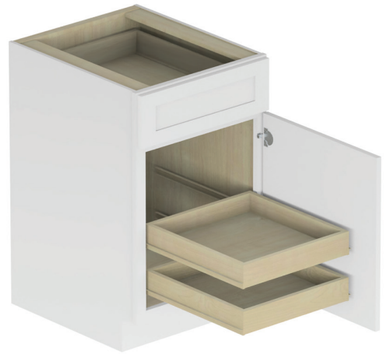

Accessories, Panels and Mouldings

Enhance your design with coordinated accessories, panels, and mouldings.

SKU Code

Accessories item SKUs will differ greatly depending on the type of item. It is important to review all measurements or notes per item ordered to ensure you are getting the correct item based on job needs.

Designer/Owner Recommendations

It's better to order extra than the exact amount in most cases as mistakes or adjustments will likely happen during the install. Ordering slightly more than projected will help to prevent delays with job completion. Adornus recommends ordering extra mouldings, fillers, or toe kicks.

Installation Notes

Before installation carefully inspect all accessory items. If an item has a critical flaw, be sure to set it aside and contact us for claim damage. Pictures will be requested of any items with defects or faults and must be submitted before a claim can be processed.

Cabinet Accessories

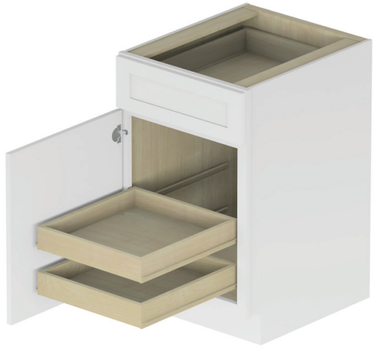

Pull Out Tray

Code	Description	Width	Height	Depth	Price
PO15	Pull Out Tray 15"	11 1/2	4	21	$440
PO18	Pull Out Tray 18"	14 1/2	4	21	$464
PO21	Pull Out Tray 21"	17 1/2	4	21	$487
PO24	Pull Out Tray 24"	20 1/2	4	21	$511
PO27	Pull Out Tray 27"	23 1/2	4	21	$533
PO30	Pull Out Tray 30"	26 1/2	4	21	$556
PO33	Pull Out Tray 33"	29 1/2	4	21	$580
PO36	Pull Out Tray 36"	32 1/2	4	21	$597

Each pull-out tray is sold individually. You receive the exact quantity ordered.



Lazy Susan Insert

Code	Description	Width	Height	Depth	Price
LS INSERT 33	Fits in LS33"	-	-	-	$800
LS INSERT 36	Fits in LS36"	-	-	-	$843

Cabinet Accessories

Door Sample

Code	Description	Width	Height	Depth	Price
SD	Door Sample	12	15	3/4	$67



Mini Base Sample Cabinet

Code	Description	Width	Height	Depth	Price
MINI	Single Door One Drawer One Adjustable shelf	12	21	15	$667

Cabinet Accessories



Floating Shelf

Code	Description	Width	Height	Depth	Price
NSFS24-13	Natural Stain Floating Shelf 24"	24	13	3	$835
NSFS30-13	Natural Stain Floating Shelf 30"	30	13	3	$899
NSFS36-13	Natural Stain Floating Shelf 36"	36	13	3	$1034



Floating Shelf

Code	Description	Width	Height	Depth	Price
OAKFS24-13	White Oak Floating Shelf 24"	24	13	3	$835
OAKFS30-13	White Oak Floating Shelf 30"	30	13	3	$754
OAKFS36-13	White Oak Floating Shelf 36"	36	13	3	$968

Cabinet Accessories



Touchup Kit

Code	Description	Width	Height	Depth	Price
TUK	Touchup Kit	-	-	-	$100



Base/Wall Filler

Code	Description	Width	Height	Depth	Price
F330	3/4" Thick Hardwood	3	30	3/4	$73
F336	3/4" Thick Hardwood	3	36	3/4	$78
F342	3/4" Thick Hardwood	3	42	3/4	$83

All edges of the filler are finished.



Base/Wall Filler

Code	Description	Width	Height	Depth	Price
F630	3/4" Thick Hardwood	6	30	3/4	$140
F636	3/4" Thick Hardwood	6	36	3/4	$165
F642	3/4" Thick Hardwood	6	42	3/4	$191

All edges of the filler are finished.



Tall Filler

Code	Description	Width	Height	Depth	Price
F396	3/4" Thick Hardwood	3	96	3/4	$271
F696	3/4" Thick Hardwood	6	96	3/4	$534

All edges of the filler are finished.



Refrigerator End Panel

Code	Description	Width	Height	Depth	Price
REP3696	Single Size No Factory Modifications	36	96	3/4	$357

Base End Panel

Code	Description	Width	Height	Depth	Price
BEP	Single Size Edgebanded No Factory Modifications	23 1/4	34 1/2	3/4	$244



Base Decorative End Panel

Code	Description	Width	Height	Depth	Price
BDP2430	Single Size No Factory Modifications	23 1/2	29 1/4	3/4	$166



Wall Decorative End Panel

Code	Description	Width	Height	Depth	Price
WDP1230	Wall Decorative Panel 30"H	11 1/2	29 1/2	3/4	$114
WDP1236	Wall Decorative Panel 36"H	11 1/2	35 1/2	3/4	$134
WDP1242	Wall Decorative Panel 42"H	11 1/2	41 1/2	3/4	$154

Metropolitan White Finish Back Panel

Code	Description	Width	Height	Depth	Price
FBP4896	Single Size No Factory Modifications	48	96	1/4	$317



Tall End Decorative Panel

Code	Description	Width	Height	Depth	Price
UCDP84	Flush With Cabinet Door 24 5/8" X 79 1/2"	24 5/8	79 1/2	3/4	$425
UCDP90	Flush With Cabinet Door 24 5/8" X 85 1/2"	24 5/8	85 1/2	3/4	$453
UCDP96	Flush With Cabinet Door 24 5/8" X 91 1/2"	24 5/8	91 1/2	3/4	$481



Quarter Round Molding

Code	Description	Width	Height	Depth	Price
QR96	No Factory Modifications	96	3/4	3/4	$81



Cove Crown Molding

Code	Description	Width	Height	Depth	Price
CVCM	Single Size No Factory Modifications	96	3 1/2	3/4	$180



Classic Crown Molding

Code	Description	Width	Height	Depth	Price
CCM	Single Size 2 5/8" Projection No Factory Modifications	96	5	3/4	$273



Finished Toe Kick

Code	Description	Width	Height	Depth	Price
TK96	Finished Toe Kick	96	4 1/2	1/4	$74



Outside Corner Molding

Code	Description	Width	Height	Depth	Price
OCM96	No Factory Modifications	96	3/4	3/4	$113



Angle Crown Molding

Code	Description	Width	Height	Depth	Price
CVCM	Single Size 4 3/8" Projection No Factory Modifications	96	3 1/2	3/4	$371



Light Molding Shaker

Code	Description	Width	Height	Depth	Price
LMS	No Factory Modifications	96	1 1/2	1/8	$163

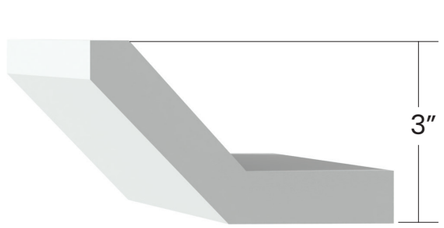

Angel Crown Molding

Code	Description	Width	Height	Depth	Price
ACM	Single Size 3" Projection No Factory Modifications	96	2 1/2	3/4	$192



Base Molding

Code	Description	Width	Height	Depth	Price
BM96	No Factory Modifications	96	4 1/2	3/4	$180

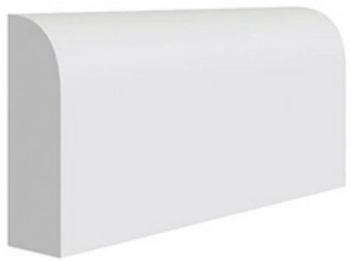

Scribe Molding

Code	Description	Width	Height	Depth	Price
SM96	No Factory Modifications	96	3/4	1/4	$180

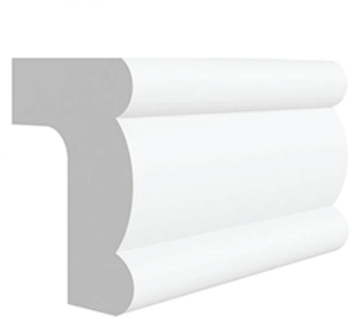

Light Molding Classic

Code	Description	Width	Height	Depth	Price
LMC	No Factory Modifications	96	1 1/2	1 1/8	$167

adornus™

Metropolitan Series

Other Adornus Collections to consider!

Alusso | Euro-Modern

New level of luxury to the modern home.

Select from glossy, matte, or textured finishes.

Designer | Frameless

The solution for Semi-custom cabinetry.

Modify width, height, and depth within specs.

Miami Warehouse

10400 NW 21st Suite 115 Doral, Florida 33172

305.629.4800

New Jersey Warehouse

5 Santa Fe Way, Suite 501 East Windsor, NJ 08512

201.577.5421

www.adornus.com

Version: V2 - April 2026

